Hybrid Inverter

SUN-7.6K-SG01LP1-EU

SUN-8K-SG01LP1-EU

User Manual

deye.shop - support@deye.shop - 8 800 201-76-60

Contents

1. Safety Introductions 01-02
2. Product instructions 02-05
2.1 Product Overview
2.2 Product Size
2.3 Product Features
2.4 Basic System Architecture
3. Installation 06-26
3.1 Parts list
3.2 Product handling requirements
3.3 Mounting instructions
3.4 Battery connection
3.5 Grid connection and backup load connection
3.6 PV Connection
3.7 CT Connection
3.7.1 Meter Connection
3.8 Earth Connection(mandatory)
3.9 WIFI Connection
3.10 Wiring System for Inverter
3.11 Typical application diagram of diesel generator
3.12 Single phase (230Vac) parallel connection diagram
3.13 Parallel connection for 230/400 three phase
3.14 3pcs in parallel with diesel generator
4. OPERATION 27
4.1 Power ON/OFF
4.2 Operation and Display Panel
5. LCD Display Icons 28-40
5.1 Main Screen
5.2 Solar Power Curve
5.3 Curve Page-Solar & Load & Grid
5.4 System Setup Menu
5.5 Basic Setup Menu
5.6 Battery Setup Menu
5.7 System Work Mode Setup Menu
5.8 Grid Setup Menu
5.9 Generator Port Use Setup Menu
5.10 Advanced Function Setup Menu
5.11 Device Info Setup Menu
6. Mode 40-42
7. Fault information and processing 42-45
8. Limitation of Liability 45
9. Datasheet 46-47
10. Appendix I 48-50
11. Appendix II 51
12. EU Declaration of Conformity 51-52

deye.shop · support@deye.shop · 8 800 201-76-60

About This Manual

The manual mainly describes the product information, guidelines for installation, operation and maintenance. The manual cannot include complete information about the photovoltaic (PV) system.

How to Use This Manual

Read the manual and other related documents before performing any operation on the inverter. Documents must be stored carefully and be available at all times.

Contents may be periodically updated or revised due to product development. The information in this manual is subject to change without notice. The latest manual can be acquired via service@deye.com.cn

1. Safety Introductions

Labels description

Label	Description
	Caution, risk of electric shock symbol indicates important safety instructions, which if not correctly followed, could result in electric shock.
	The DC input terminals of the inverter must not be grounded.
	Surface high temperature, Please do not touch the inverter case.
5min	The AC and DC circuits must be disconnected separately, and the maintenance personnel must wait for 5 minutes before they are completely powered off before they can start working.
	CE mark of conformity
	Please read the instructions carefully before use.
	Symbol for the marking of electrical and electronics devices according to Directive 2002/96/EC. Indicates that the device, accessories and the packaging must not be disposed as unsorted municipal waste and must be collected separately at the end of the usage. Please follow Local Ordinances or Regulations for disposal or contact an authorized representative of the manufacturer for information concerning the decommissioning of equipment.

deye.shop · support@deye.shop · 8 800 201-76-60

· This chapter contains important safety and operating instructions. Read and keep this manual for future reference.
· Before using the inverter, please read the instructions and warning signs of the battery and corresponding sections in the instruction manual.
· Do not disassemble the inverter. If you need maintenance or repair, take it to a professional service center.
· Improper reassembly may result in electric shock or fire.
· To reduce risk of electric shock, disconnect all wires before attempting any maintenance or cleaning. Turning off the unit will not reduce this risk.
· Caution: Only qualified personnel can install this device with battery.
· Never charge a frozen battery.
· For optimum operation of this inverter, please follow required specification to select appropriate cable size. It is very important to correctly operate this inverter.
· Be very cautious when working with metal tools on or around batteries. Dropping a tool may cause a spark or short circuit in batteries or other electrical parts, even cause an explosion.
· Please strictly follow installation procedure when you want to disconnect AC or DC terminals. Please refer to "Installation" section of this manual for the details.
· Grounding instructions - this inverter should be connected to a permanent grounded wiring system. Be sure to comply with local requirements and regulation to install this inverter.
· Never cause AC output and DC input short circuited. Do not connect to the mains when DC input short circuits.

2. Product Introductions

This is a multifunctional inverter, combining functions of inverter, solar charger and battery charger to offer uninterruptible power support with portable size. Its comprehensive LCD display offers user configurable and easy accessible button operation such as battery charging, AC/solar charging, and acceptable input voltage based on different applications.

deye.shop · support@deye.shop · 8 800 201-76-60

2.1 Product Overview

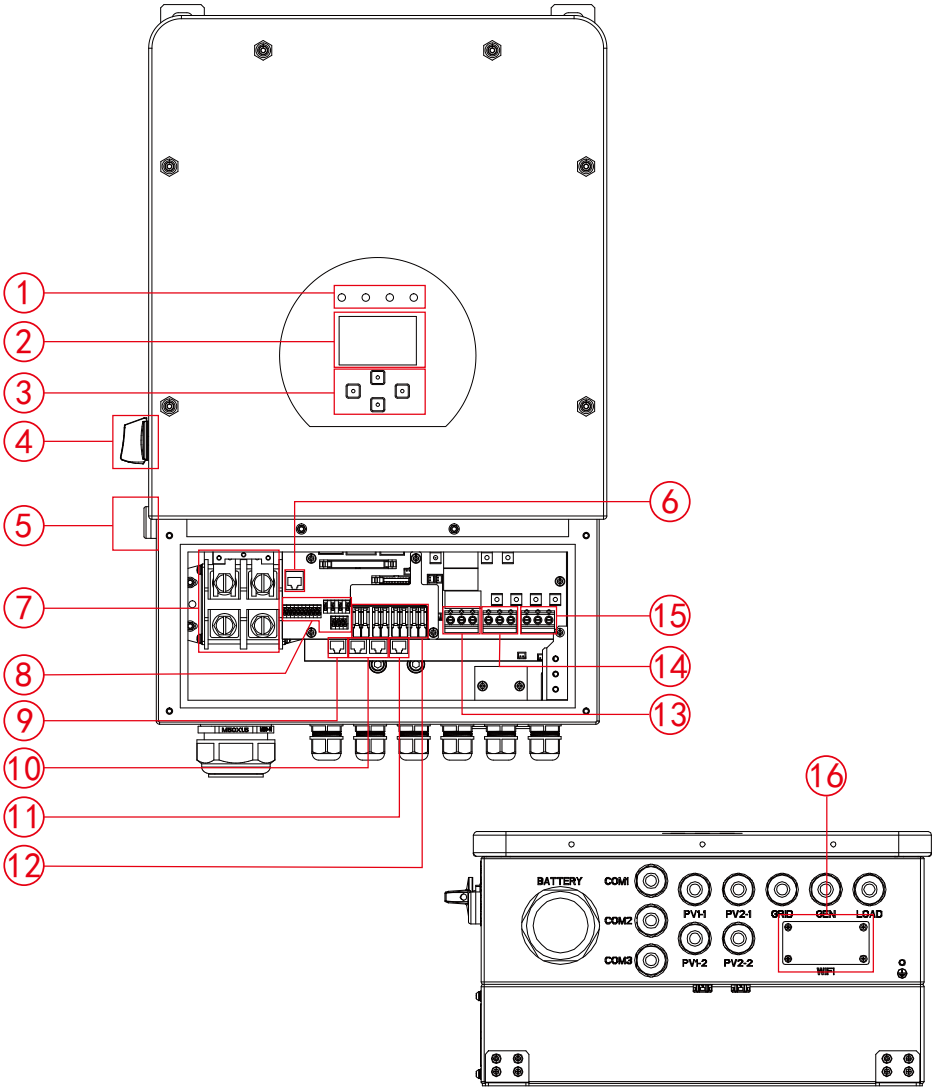

1: Inverter Indicators
2: LCD display
3: Function Buttons
4: DC Switch
5: Power on/off button
6: BMS port
7: Battery input connectors
8: Function Port
9: Meter_CON port
10: Parallel port
11: DRM Port
12: PV input
13: Grid
14: Generator input
15: Load
16: WiFi Interface

deye.shop · support@deye.shop · 8 800 201-76-60

2.2 Product Size

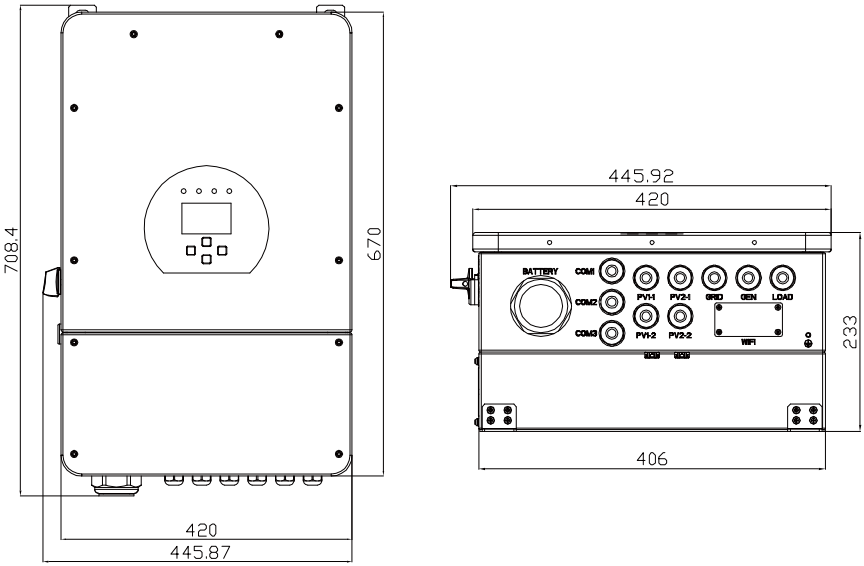

Inverter Size

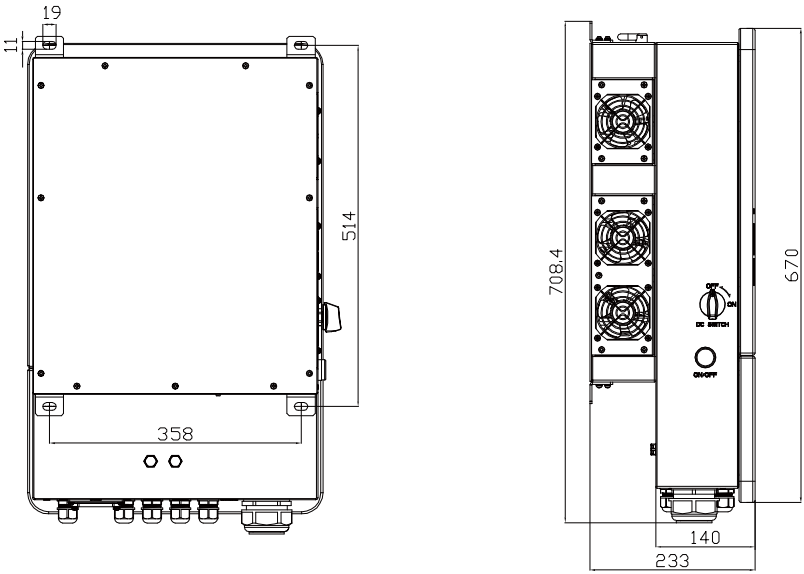

deye.shop · support@deye.shop · 8 800 201-76-60

2.3 Product Features

- Supports Split phase 120/240Vac, Three-phase 120/208Vac system.
- Self-consumption and feed-in to the grid.
- Auto restart while AC is recovering.
- Programmable supply priority for battery or grid.
- Programmable multiple operation modes: On grid, off grid and UPS.
- Configurable battery charging current/voltage based on applications by LCD setting.
- Configurable AC/Solar/Generator Charger priority by LCD setting.
- Compatible with mains voltage or generator power.
- Overload/over temperature/short circuit protection.
- Smart battery charger design for optimized battery performance
- With limit function, prevent excess power overflow to the grid.
- Supporting WIFI monitoring and build-in 2 strings of MPP trackers
- Smart settable three stages MPPT charging for optimized battery performance.
- Time of use function.
- Smart Load Function.

2.4 Basic System Architecture

The following illustration shows basic application of this inverter.
It also includes following devices to have a Complete running system.
- Generator or Utility
- PV modules

Consult with your system integrator for other possible system architectures depending on your requirements.
This inverter can power all kinds of appliances in home or office environment, including motor type appliances such as refrigerator and air conditioner.

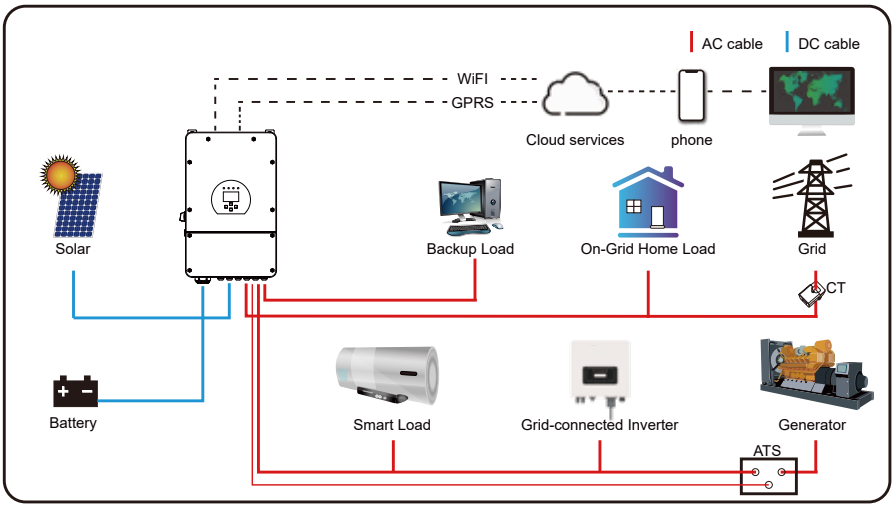

deye.shop · support@deye.shop · 8 800 201-76-60

3. Installation

3.1 Parts List

Check the equipment before installation. Please make sure nothing is damaged in the package. You should have received the items in the following package:

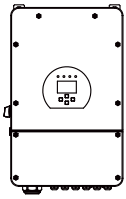

Hybrid inverter
x1

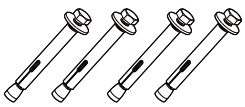

Stainless steel anti-collision bolt M8×80
x4

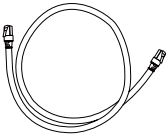

Parallel communication cable x1

L-type Hexagon wrench
x1

User manual x1

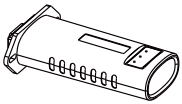

Datalogger (optional) x1

Battery temperature sensor
x1

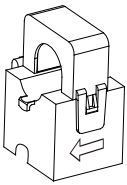

Sensor Clamp
x1

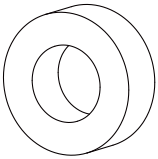

Magnetic ring for battery
x1

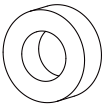

Magnetic ring x3*

*One for BMS communication cable, and another two for AC wires.

deye.shop · support@deye.shop · 8 800 201-76-60

3.2 Product handling requirements

Lift the inverter out of the packing box and transport it to designated installation location.

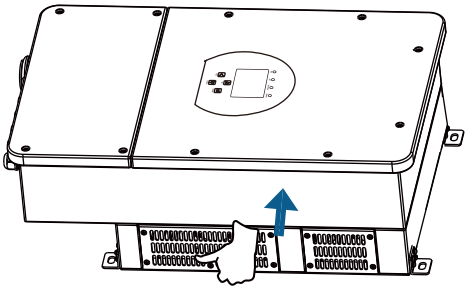

transport

CAUTION:

Improper handling may cause personal injury!

• Arrange an appropriate number of personnel to carry the inverter according to its weight, and installation personnel should wear protective equipment such as anti-impact shoes and gloves.

• Placing the inverter directly on a hard ground may cause damage to its metal enclosure. Protective materials such as sponge pad or foam cushion should be placed underneath the inverter.

• Move the inverter by one or two people or by using a proper transport tool.

• Move the inverter by holding the handles on it. Do not move the inverter by holding the terminals.

3.3 Mounting instructions

Installation Precaution

This Hybrid inverter is designed for outdoor use(IP65), Please make sure the installation site meets below conditions:

· Not in direct sunlight
· Not in areas where highly flammable materials are stored.
· Not in potential explosive areas.
· Not in the cool air directly.
· Not near the television Antenna or antenna cable.
· Not higher than altitude of about 2000 meters above sea level.
· Not in environment of precipitation or humidity(>95%)

deye.shop · support@deye.shop · 8 800 201-76-60

Please AVOID direct sunlight, rain exposure, snow laying up during installation and operation. Before connecting all wires, please take off the metal cover by removing screws as shown below:

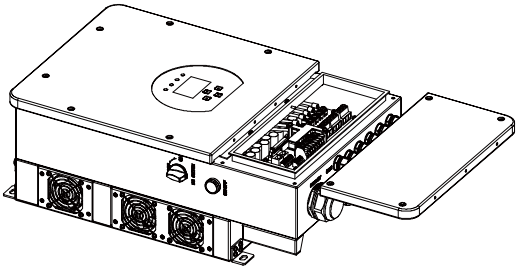

Installations Tools

Installation tools can refer to the following recommended ones. Also, use other auxiliary tools on site.

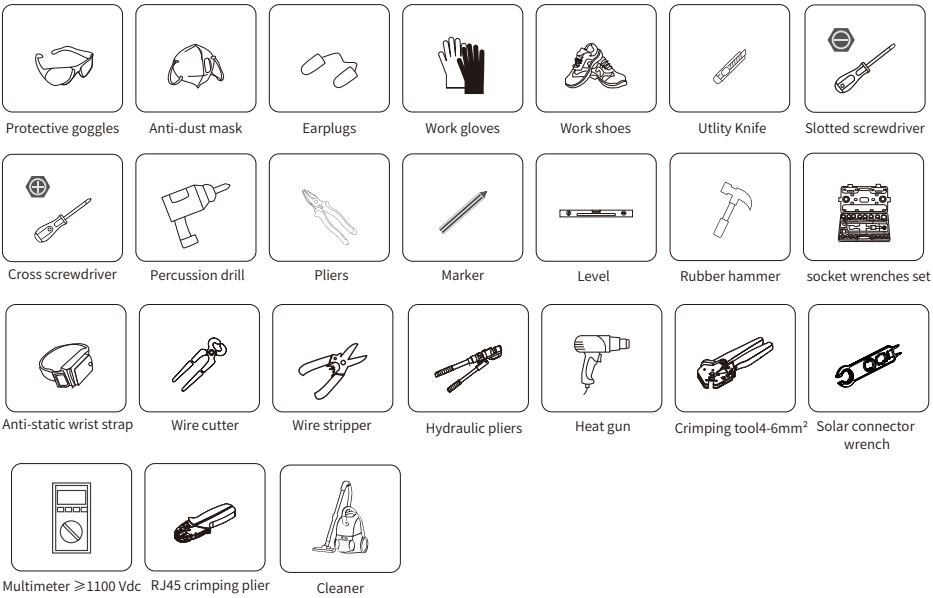

deye.shop · support@deye.shop · 8 800 201-76-60

Considering the following points before selecting where to install:

· Please select a vertical wall with load-bearing capacity for installation, suitable for installation on concrete or other non-flammable surfaces,installation is shown below.
· Install this inverter at eye level in order to allow the LCD display to be read at all times.
· The ambient temperature is recommeded to be between -40~60℃ to ensure optimal operation.
· Be sure to keep other objects and surfaces as shown in the diagram to guarantee sufficient heat dissipation and have enough space for removing wires.

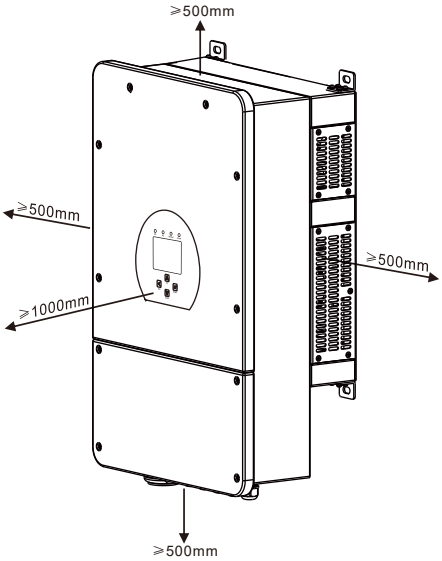

For proper air circulation to dissipate heat, allow a clearance of approx. 50cm to the side and approx. 50cm above and below the unit. And 100cm to the front.

Mounting the inverter

Remember that this inverter is heavy! Please be careful when lifting out from the package.
Choose the recommend drill head(as shown in below pic) to drill 4 holes on the wall, 82-90mm deep.
1. Use a proper hammer to fit the expansion bolt into the holes.
2. Carry the inverter and holding it, make sure the hanger aim at the expansion bolt,fix the inverter on the wall.
3. Fasten the screw head of the expansion bolt to finish the mounting.

deye.shop · support@deye.shop · 8 800 201-76-60

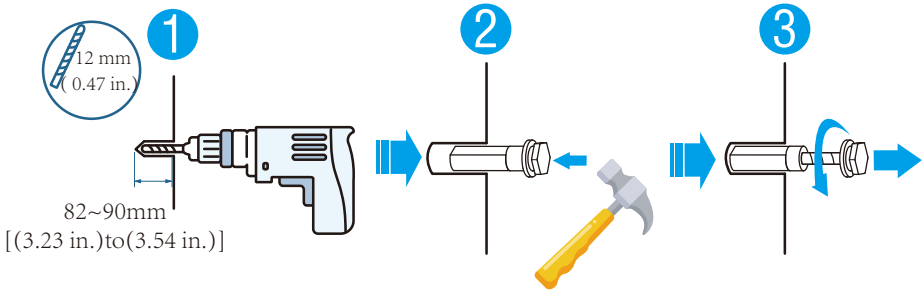

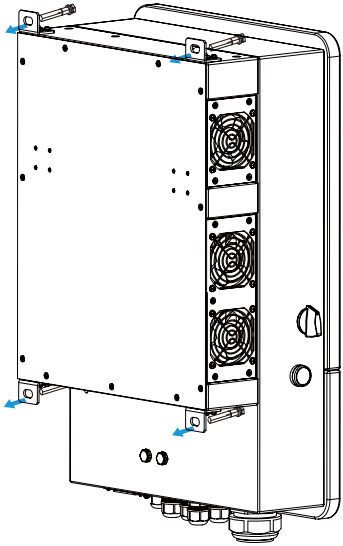

3.4 Battery connection

For safe operation and compliance, a separate DC over-current protector or disconnect device is required between the battery and the inverter. In some applications, switching devices may not be required but over-current protectors are still required. Refer to the typical amperage in the table below for the required fuse or circuit breaker size.

Model	*Wire Size*	*Cable(mm²)*	*Torque value(max)*
7.6/8kW	3/0AWG	70	24.5Nm

Chart 3-2 Cable size

deye.shop · support@deye.shop · 8 800 201-76-60

All wiring must be performed by a professional person.

Connecting the battery with a suitable cable is important for safe and efficient operation of the system. To reduce the risk of injury, refer to Chart 3-2 for recommended cables.

Please follow below steps to implement battery connection:

1. Please choose a suitable battery cable with correct connector which can well fit into the battery terminals.
2. Use a suitable screwdriver to unscrew the bolts and fit the battery connectors in, then fasten the bolt by the screwdriver, make sure the bolts are tightened with torque of 24.5 N.M in clockwise direction
3. Make sure polarity at both the battery and inverter is correctly connected.

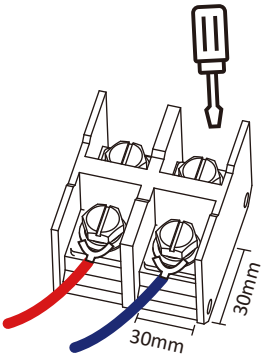

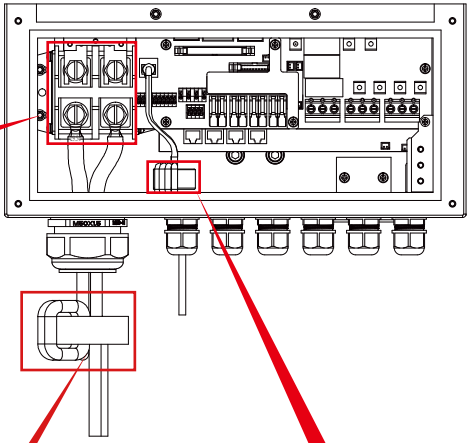

For 7.6/8kW model, battery connector screw size: M10

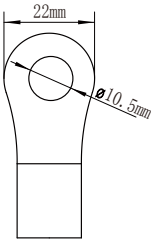

DC Battery Input

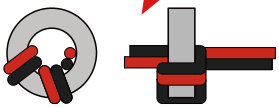

Pass the battery power cable through the magnetic ring and wrap it around the magnetic ring two times.

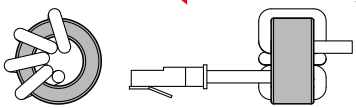

Pass the BMS communication cable through the magnetic ring and wrap it around the magnetic ring four times.

4. In case of children touch or insects go into the inverter, Please make sure the inverter connector is fasten to waterproof position by twist it clockwise.

Installation must be performed with care.

Before making the final DC connection or closing DC breaker/disconnect, be sure positive(+) must be connect to positive(+) and negative(-) must be connected to negative(-). Reverse polarity connection on battery will damage the inverter.

deye.shop · support@deye.shop · 8 800 201-76-60

3.4.1 Function port definition

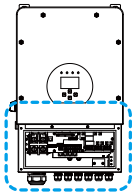

Inverter

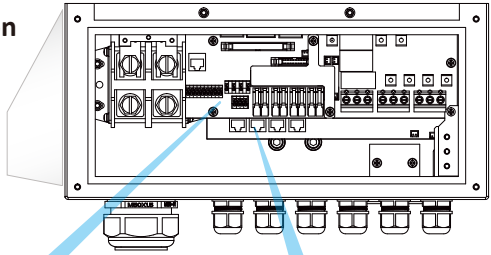

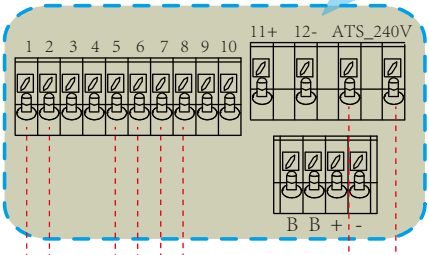

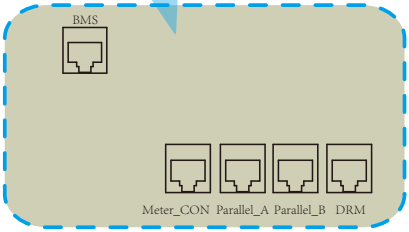

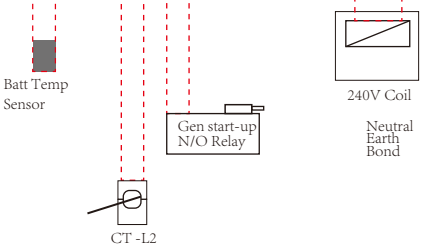

BMS: BMS port for battery communication.
Meter_CON: for energy meter communication.
Parallel A: Parallel communication port 1 (CAN interface).
Parallel B: Parallel communication port 2 (CAN interface).
DRM: It is used to accept the external input signal(Digital input).

TEMP (1,2): battery temperature sensor for lead acid battery.
CT-L1 (3,4): current transformer (CT1) for “zero export to CT”mode clamps on L1 when in split phase system.
CT-L2 (5,6): current transformer (CT2) for “zero export to CT”mode clamps on L2 when in split phase system.
Note: For - EU model (7.6/8kW,230V@50Hz), 1pcs CT is needed only, and the secondary side of the CT should be connected to 5&6 port (CT-L2).
G-start (7,8): dry contact signal for startup the diesel generator.
When the "GEN signal" is active, the open contact (GS) will switch on (no voltage output).
G-valve (9,10): reserved.

RSD_12V_out(11+,12-): When battery is connected and the inverter is in "ON" status, it will provide 12Vdc.
ATS_240V: If the conditions are met, it will output 230Vac.

RSD_Short Signal/RSD_Voltage Signal(B,B/+,-): when the terminal “B” & “B” is short-circuited with additional wire connection, or there’s 12Vdc input at the terminal “+ & - “, then the 12Vdc of RSD+ & RSD- will disappear immediately, and the inverter will shutdown immediately.

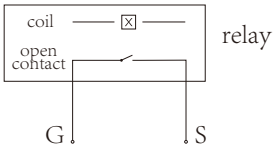

GS (diesel generator startup signal)

deye.shop · support@deye.shop · 8 800 201-76-60

3.4.2 Temperature sensor connection for lead-acid battery

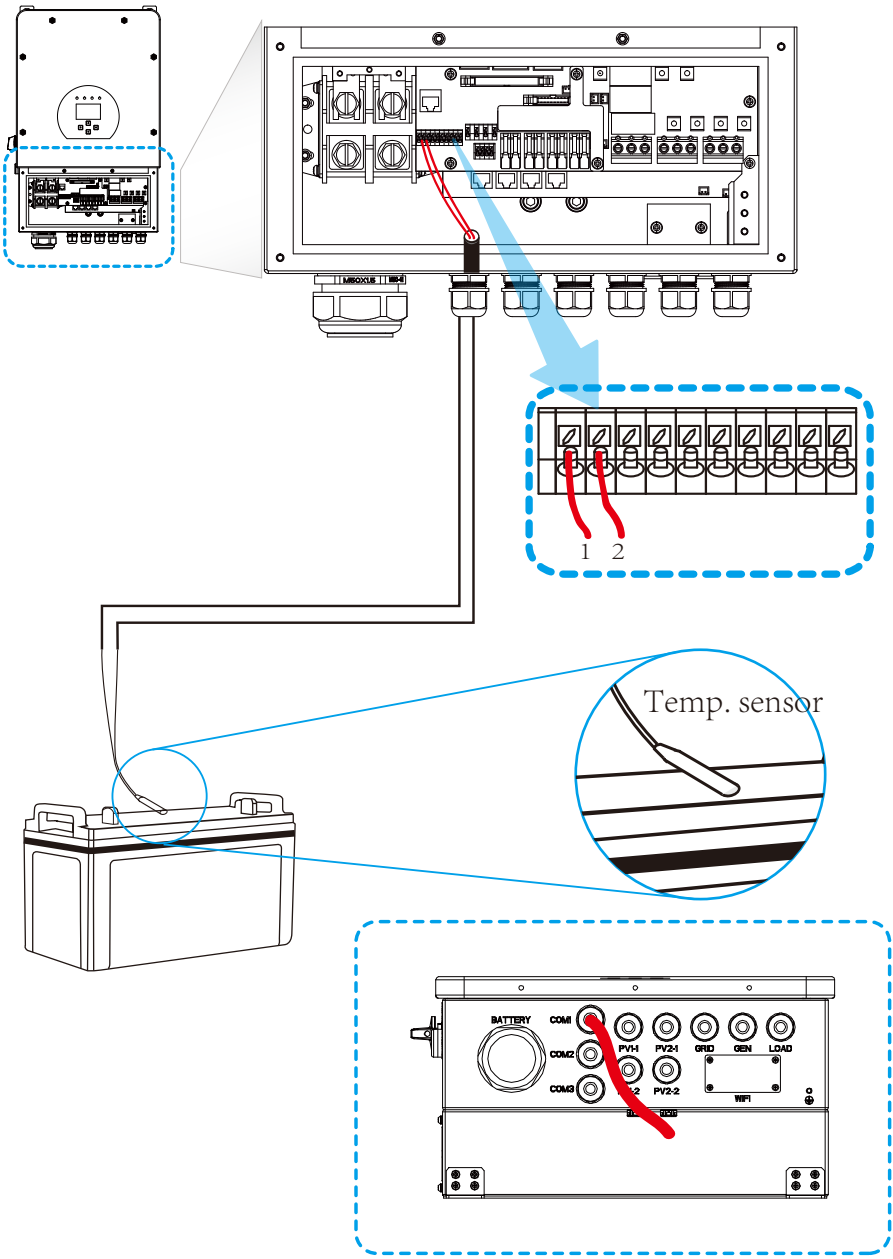

deye.shop · support@deye.shop · 8 800 201-76-60

3.5 Grid connection and backup load connection

· Before connecting to the grid, a separate AC breaker must be installed between the inverter and the grid, and also between the backup load and the inverter.This will ensure the inverter can be securely disconnected during maintenance and fully protected from over current. The recommended of AC breaker is 63A for 8kW.

· There are three terminal blocks with "Grid" "Load"and "GEN" markings. Please do not misconnect input and output connectors.

Note:
In final installation,breaker certified according to IEC 60947-1 and IEC 60947-2 shall be installed with the equipment.

All wiring must be performed by a qualified personnel.It is very important for system safety and efficient operation to use appropriate cable for AC input connection. To reduce risk of injury, please use the proper recommended cable as below.

Grid connection and backup load connection (Copper wires)

Model	*Wire Size*	*Cable(mm^2)*	*Torque value(max)*
7.6/8kW	6AWG	10	1.2Nm

Grid connection and backup load connection (Copper wires) (bypass)

Model	*Wire Size*	*Cable(mm^2)*	*Torque value(max)*
7.6/8kW	6AWG	10	1.2Nm

Chart 3-3 Recommended Size for AC wires

Please follow below steps to implement AC input/output connection:

1. Before making Grid, load and Gen port connection, be sure to turn off AC breaker or disconnector first.
2. Remove insulation sleeve 10mm length, unscrew the bolts. For GRID port, just insert the wires into the terminals according to polarities indicated on the terminal block. For GEN and Load ports, thread the wires through the magnetic ring firstly, then insert these wires into the terminals according to polarities indicated on the terminal block. Tighten the terminal screws and make sure the wires are completely and safely connected.

deye.shop · support@deye.shop · 8 800 201-76-60

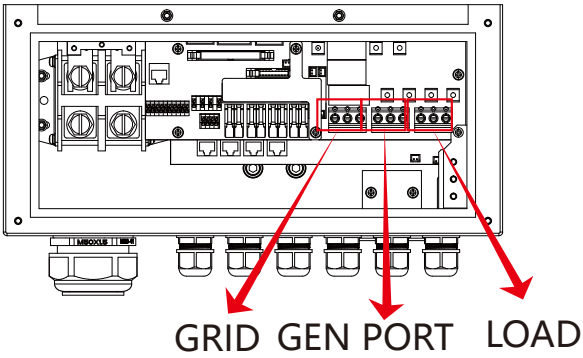

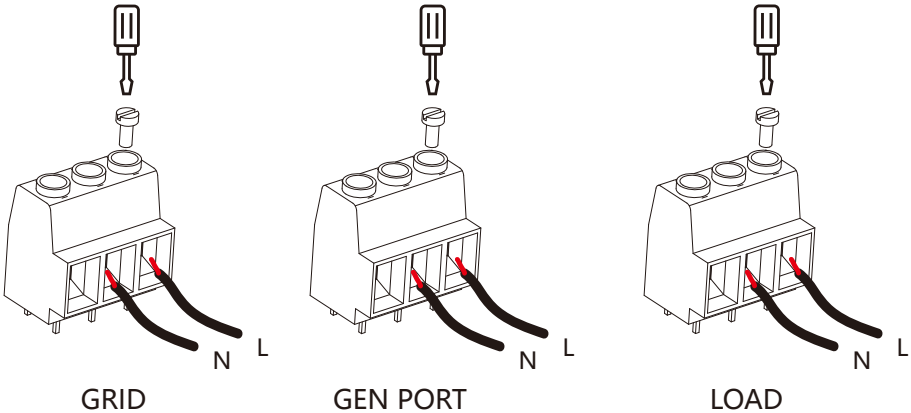

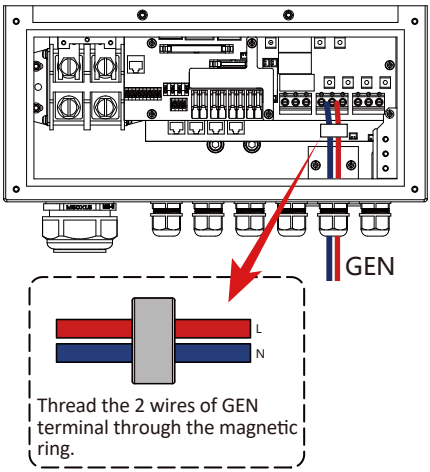

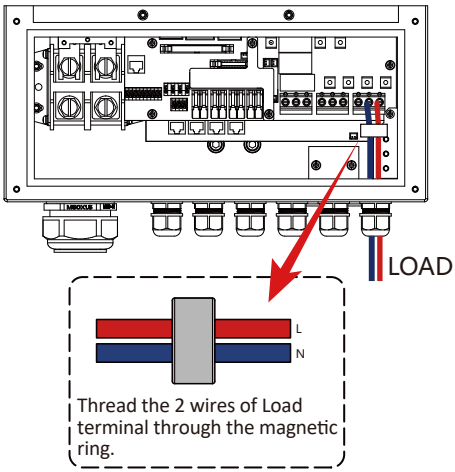

deye.shop · support@deye.shop · 8 800 201-76-60

Be sure that AC power source is disconnected before attempting to wire it to the unit.

3. Then, insert AC output wires according to polarities indicated on the terminal block and tighten terminal. Be sure to connect corresponding N wires and PE wires to related terminals as well.
4. Make sure the wires are securely connected.
5. Appliances such as air conditioner are required at least 2-3 minutes to restart because it is required to have enough time to balance refrigerant gas inside of circuit. If a power shortage occurs and recovers in short time, it will cause damage to your connected appliances. To prevent this kind of damage, please check manufacturer of air conditioner if it is equipped with time-delay function before installation. Otherwise, this inverter will trigger overload fault and cut off output to protect your appliance but sometimes it still causes internal damage to the air conditioner

3.6 PV Connection

Before connecting to PV modules, please install a separately DC circuit breaker between inverter and PV modules. It is very important for system safety and efficient operation to use appropriate cable for PV module connection. To reduce risk of injury, please use the proper recommended cable size as below.

Model	*Wire Size*	*Cable(mm²)*
7.6/8kW	12AWG	2.5

Chart 3-4 Cable size

To avoid any malfunction, do not connect any PV modules with possible current leakage to the inverter. For example, grounded PV modules will cause current leakage to the inverter. When using PV modules, please ensure the PV+ & PV- of solar panel is not connected to the system ground bar.

It is requested to use PV junction box with surge protection. Otherwise, it will cause damage on inverter when lightning occurs on PV modules.

deye.shop · support@deye.shop · 8 800 201-76-60

3.6.1 PV Module Selection:

When selecting proper PV modules, please be sure to consider below parameters:

1) Open circuit Voltage (Voc) of PV modules not exceeds max. PV array open circuit voltage of inverter.
2) Open circuit Voltage (Voc) of PV modules should be higher than min. start voltage.
3) The PV modules used to connected to this inverter shall be Class A rating certified according to IEC 61730.

Inverter Model	*7.6kW*	*8kW*
PV Input Voltage	370V (125V-500V)	
PV Array MPPT Voltage Range	150V-425V	
No. of MPP Trackers	2	
No. of Strings per MPP Tracker	2+2	

Chart 3-5

3.6.2 PV Module Wire Connection:

Please follow below steps to implement PV module connection:

1. Remove insulation sleeve 10 mm for positive and negative conductors.
2. Suggest to put bootlace ferrules on the end of positive and negative wires with a proper crimping tool.
3. Check correct polarity of wire connection from PV modules and PV input connectors. Then, connect positive pole (+) of connection wire to positive pole (+) of PV input connector. Connect negative pole (-) of connection wire to negative pole(-)of PV input connector. Close the switch and make sure the wires are tightly fixed.

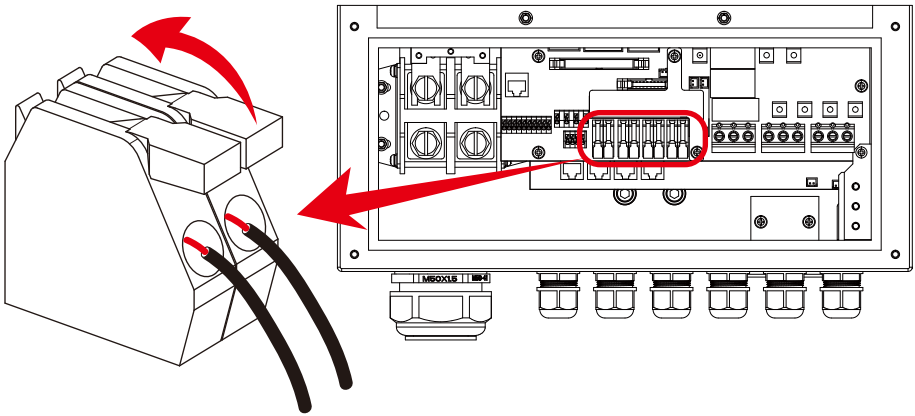

deye.shop · support@deye.shop · 8 800 201-76-60

3.7 CT Connection

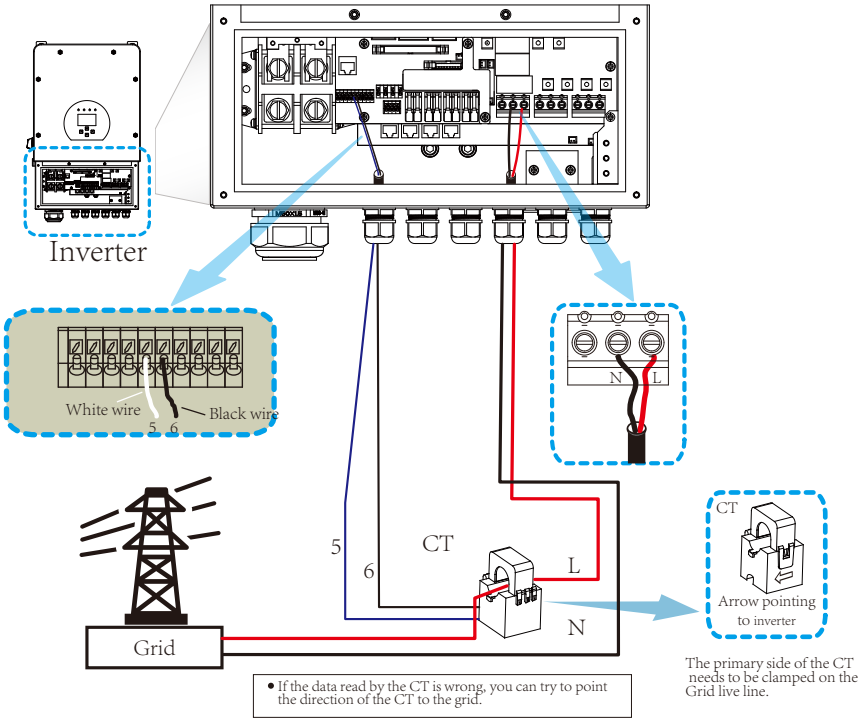

deye.shop · support@deye.shop · 8 800 201-76-60

3.7.1 Meter Connection

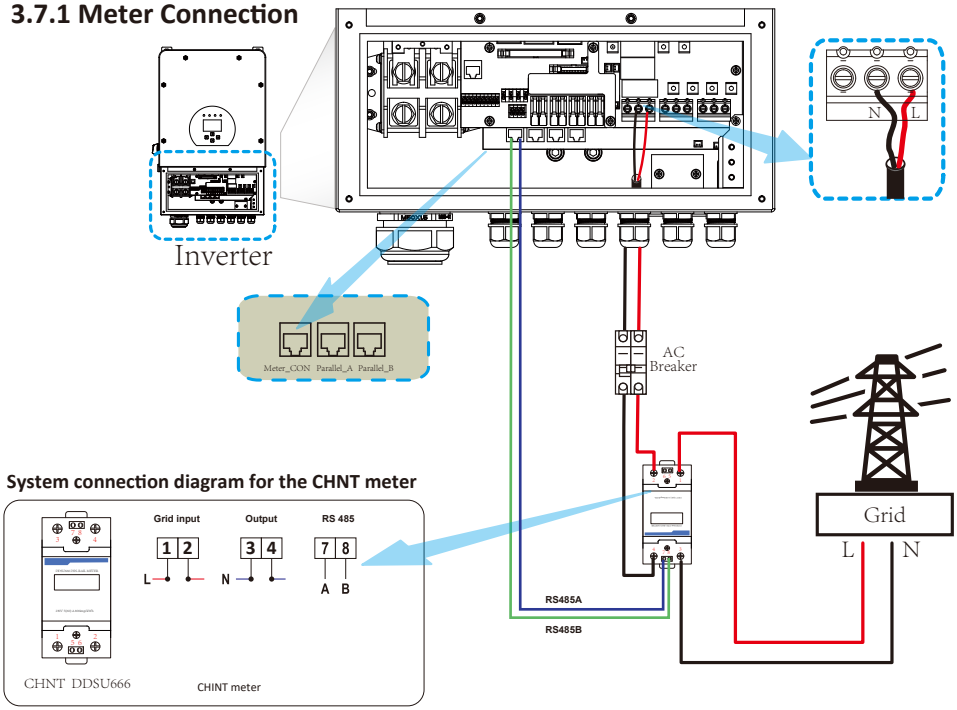

System connection diagram for the CHNT meter

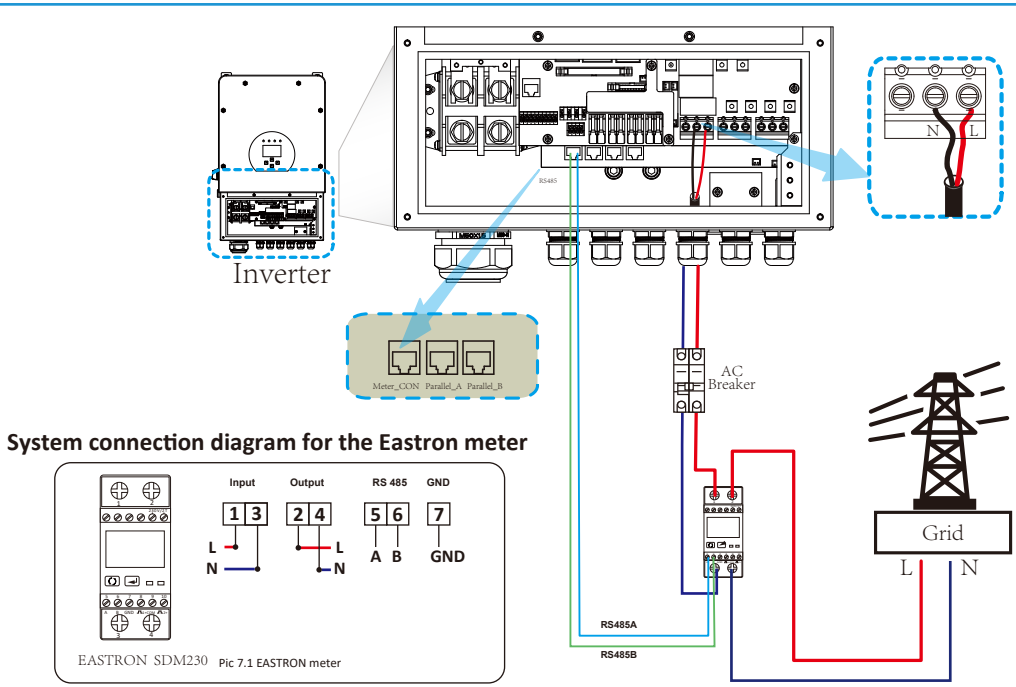

System connection diagram for the Eastron meter

Pic 7.1 EASTRON meter

deye.shop · support@deye.shop · 8 800 201-76-60

Note:
When the inverter is in the off-grid state, the N line needs to be connected to the earth.

3.8 Earth Connection(mandatory)

Ground cable shall be connected to ground plate on grid side, this prevents electric shock if the original protective conductor fails.

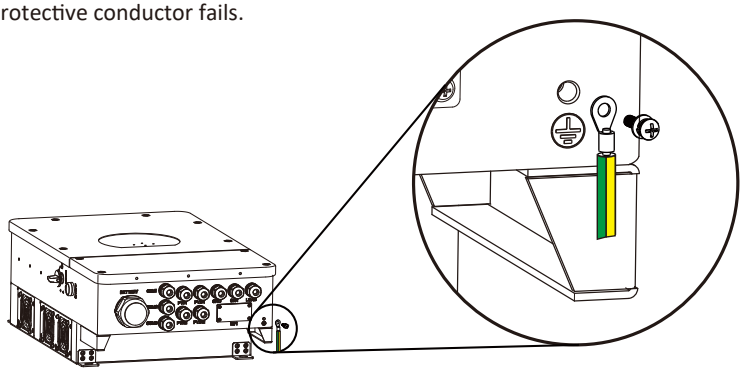

Earth connection (Copper wires)

Model	*Wire Size*	*Cable(mm²)*	*Torque value(max)*
7.6/8kW	6AWG	10	1.2Nm

Earth connection (Copper wires) (bypass)

Model	*Wire Size*	*Cable(mm²)*	*Torque value(max)*
7.6/8kW	6AWG	10	1.2Nm

Warning:
Inverter has built-in leakage current detection circuit, The type A RCD can be connected to the inverter for protection according to the local laws and regulations. If an external leakage current protection device is connected, its operating current must be equal to 300 mA or higher, otherwise inverter may not work properly.

3.9 WIFI Connection

For the configuration of Wi-Fi Plug, please refer to illustrations of the Wi-Fi Plug. The Wi-Fi Plug is not a standard configuration, it's optional.

deye.shop · support@deye.shop · 8 800 201-76-60

3.10 Wiring System for Inverter

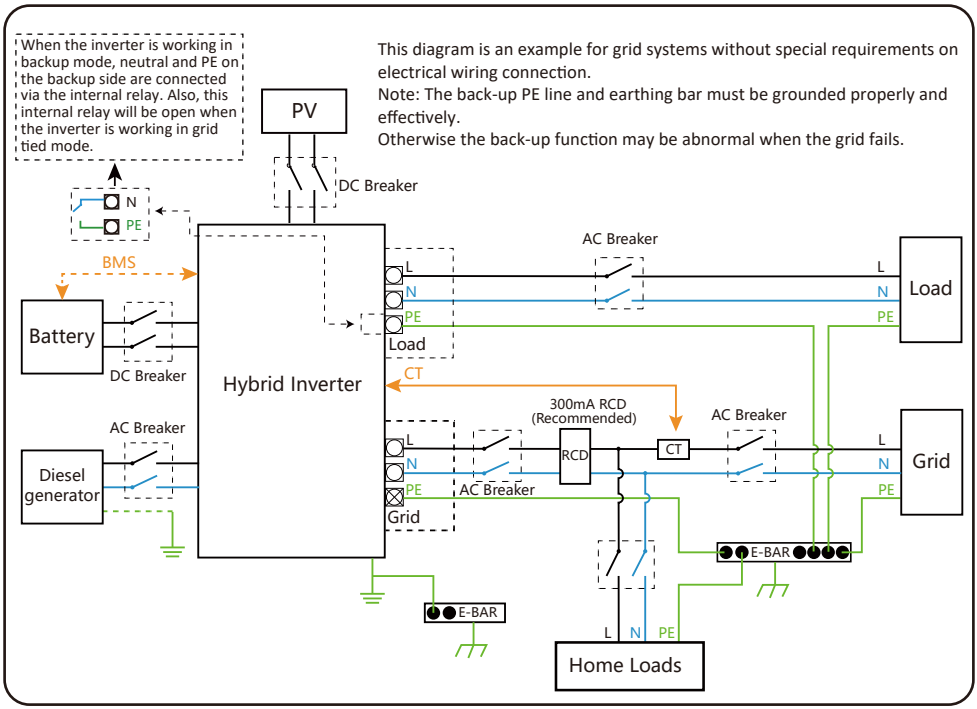

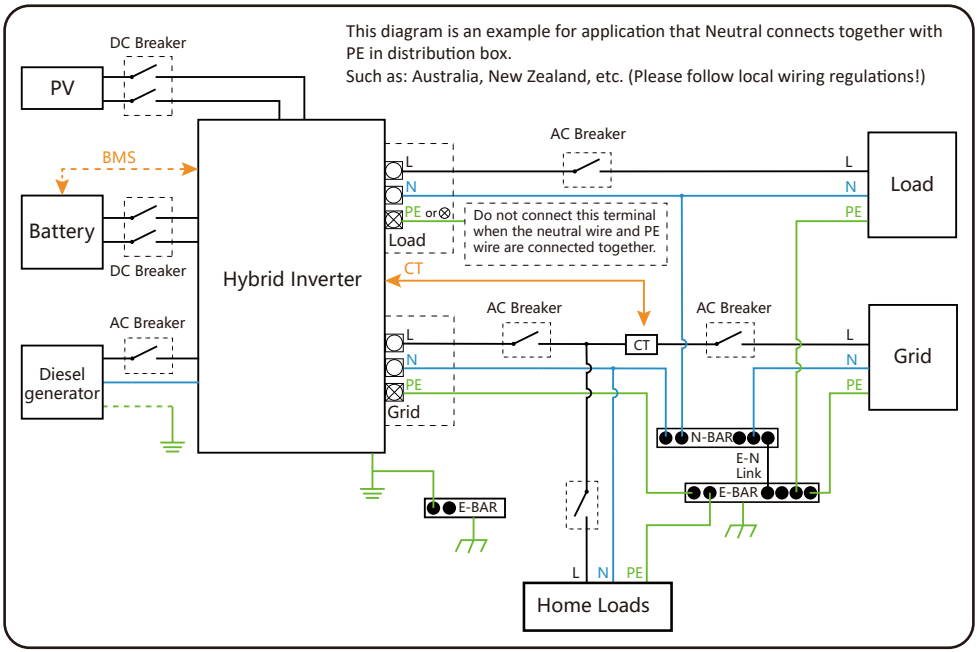

deye.shop · support@deye.shop · 8 800 201-76-60

3.11 Typical application diagram of diesel generator

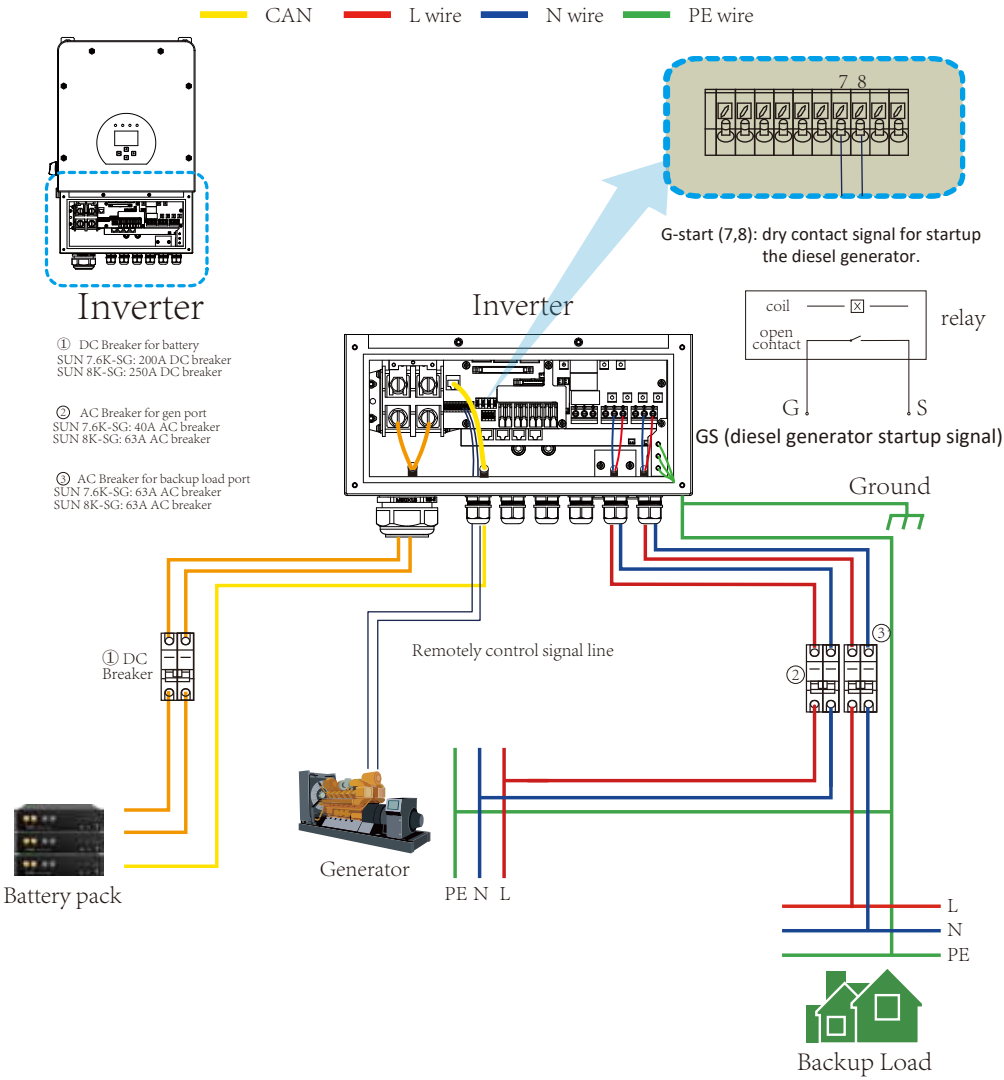

deye.shop · support@deye.shop · 8 800 201-76-60

3.12 Single phase (230Vac) parallel connection diagram

CAN L wire N wire PE wire

Inverter

Inverter No.3 (slave)

Parallel A Parallel B

Ground

Inverter No.2 (slave)

Inverter No.1 (master)

① DC Breaker

② DC Breaker

③ DC Breaker

④ ⑤ ⑥ ⑦ ⑧ ⑨

①②③ DC Breaker for battery
SUN 7.6K-SG: 200A DC breaker
SUN 8K-SG: 250A DC breaker

⑤⑦⑨ AC Breaker for grid port
SUN 7.6K-SG: 40A AC breaker
SUN 8K-SG: 63A AC breaker

④⑥⑧ AC Breaker for backup load port
SUN 7.6K-SG: 63A AC breaker
SUN 8K-SG: 63A AC breaker

⑩ AC Breaker
Depends on Home Load

Battery pack

CT

Arrow pointing to inverter

The primary side of the CT needs to be clamped on the Grid live line.

Grid

PE N L

⑩

Home Load

L
N
PE

Backup Load

Master inverter

Slave Inverter

Slave Inverter

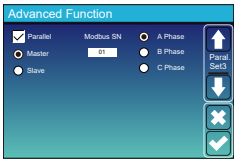

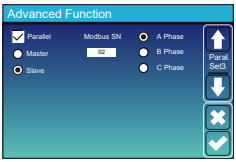

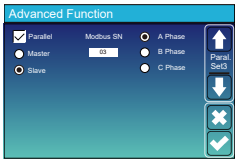

deye.shop · support@deye.shop · 8 800 201-76-60

CAN L wire N wire PE wire

Inverter

Inverter No.3 (slave)

Parallel A Parallel B

Ground

Inverter No.2 (slave)

① DC Breaker

Inverter No.1 (master)

② DC Breaker

③ DC Breaker

①②③ DC Breaker for battery
SUN 7.6K-SG: 200A DC breaker
SUN 8K-SG: 250A DC breaker
⑤⑦⑨ AC Breaker for GEN port
SUN 7.6K-SG: 40A AC breaker
SUN 8K-SG: 63A AC breaker
④⑥⑧ AC Breaker for backup load port
SUN 7.6K-SG: 63A AC breaker
SUN 8K-SG: 63A AC breaker

Battery pack

Generator

PE N L

L
N
PE

Backup Load

Master inverter

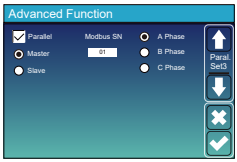

Slave Inverter

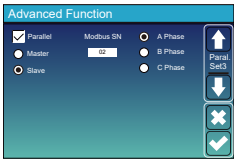

Slave Inverter

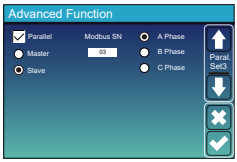

deye.shop · support@deye.shop · 8 800 201-76-60

3.13 Parallel connection for 230/400 three phase

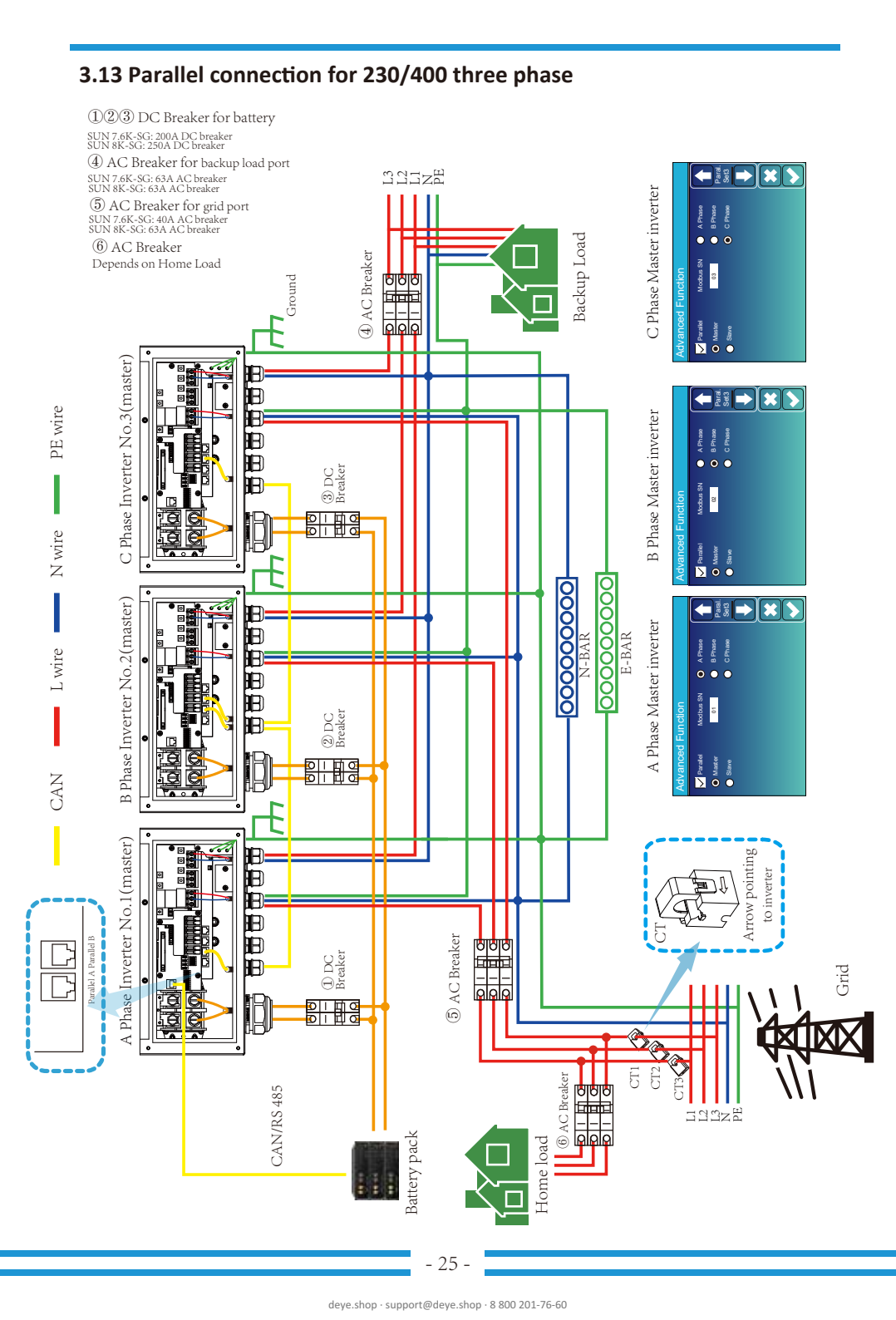

deye.shop · support@deye.shop · 8 800 201-76-60

3.14 3pcs in parallel with diesel generator

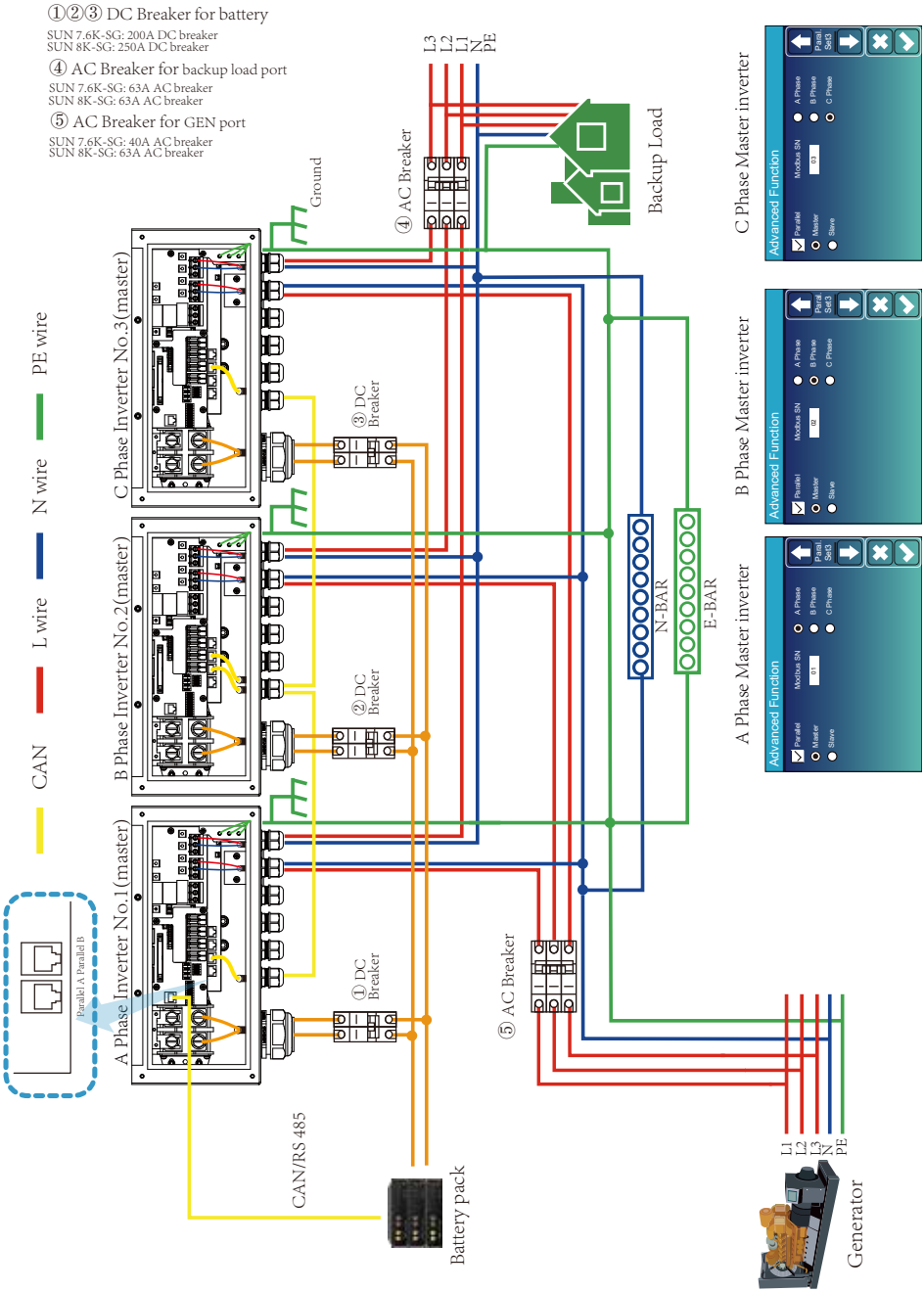

deye.shop · support@deye.shop · 8 800 201-76-60

4. OPERATION

4.1 Power ON/OFF

Once the unit has been properly installed and the batteries are connected well, simply press On/Off button(located on the left side of the case) to turn on the unit. When system without battery connected, but connect with either PV or grid, and ON/OFF button is switched off, LCD will still light up(Display will show OFF), In this condition, when switch on ON/OFF button and select NO battery,system can still working.

4.2 Operation and Display Panel

The operation and display panel, shown in below chart, is on the front panel of the inverter. It includes four indicators, four function keys and a LCD display, indicating the operating status and input/output power information.

LED Indicator		***Messages***
DC	Green led solid light	PV Connection normal
AC	Green led solid light	Grid Connection normal
Normal	Green led solid light	Inverter operating normal
Alarm	Red led solid light	Malfunction or warning

Chart 4-1 LED indicators

Function Key	***Description***
Esc	To exit setting mode
Up	To go to previous selection
Down	To go to next selection
Enter	To confirm the selection

Chart 4-2 Function Buttons

deye.shop · support@deye.shop · 8 800 201-76-60

5. LCD Display Icons

5.1 Main Screen

The LCD is touchscreen, below screen shows the overall information of the inverter.

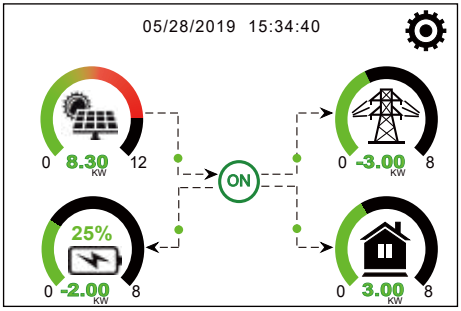

1.The icon in the center of the home screen indicates that the system is Normal operation. If it turns into "comm./F01~F64" , it means the inverter has communication errors or other errors, the error message will display under this icon(F01-F64 errors, detail error info can be viewed in the System Alarms menu).

2.At the top of the screen is the time.

3.System Setup Icon, Press this set button,you can enter into the system setup screen which including Basic Setup, Battery Setup, Grid Setup, System Work Mode, Generator port use, Advanced function and Li-Batt info.

4.The main screen showing the info including Solar, Grid, Load and Battery. Its also displaying the energy flow direction by arrow. When the power is approximate to high level, the color on the panels will changing from green to red so system info showing vividly on the main screen.

· PV power and Load power always keep positive.
· Grid power negative means sell to grid, positive means get from grid.
· Battery power negative means charge, positive means discharge.

deye.shop · support@deye.shop · 8 800 201-76-60

5.1.1 LCD operation flow chart

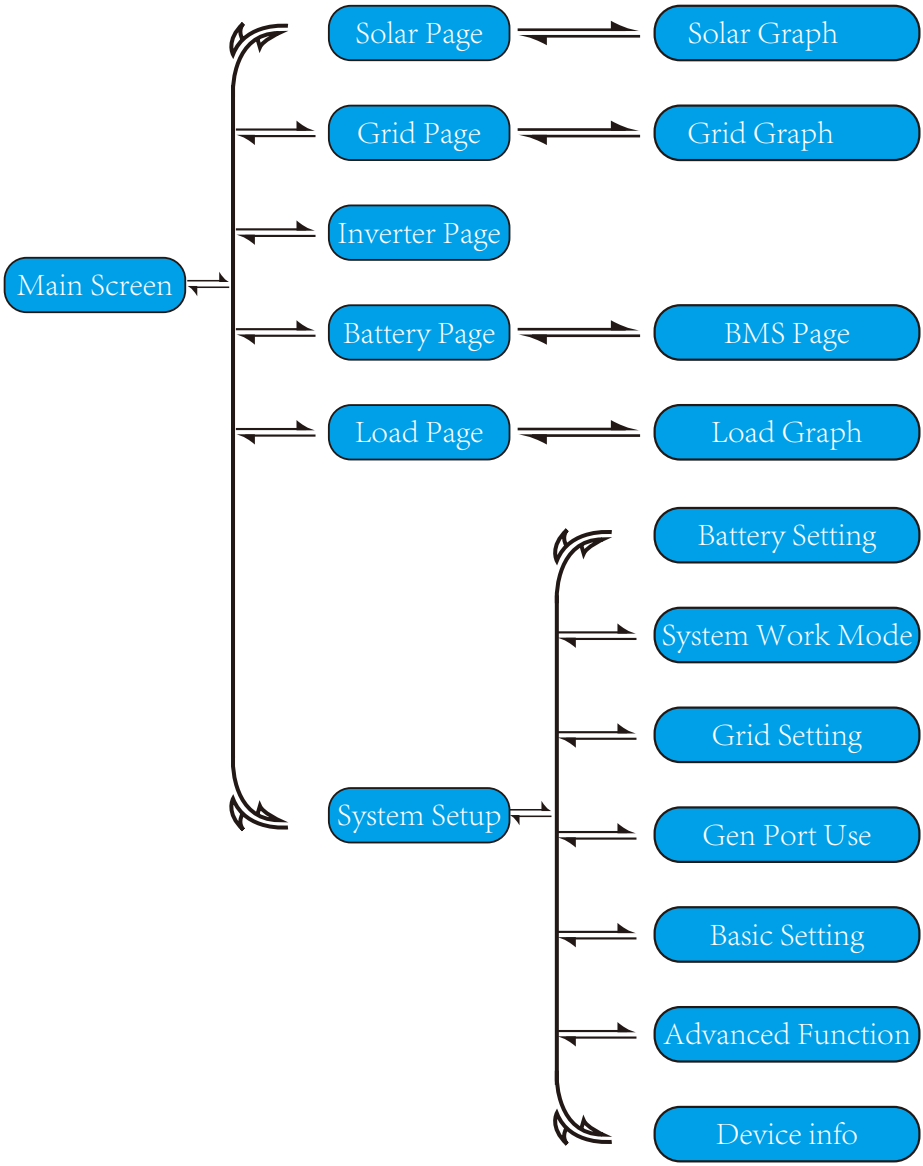

deye.shop · support@deye.shop · 8 800 201-76-60

5.2 Solar Power Curve

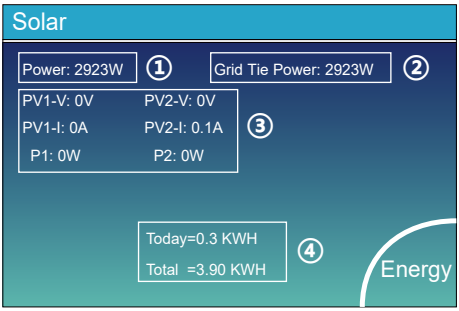

This is Solar Panel detail page.

① Solar Panel Generation.

② **Grid Tie Power:** when there's a string inverter AC couple at the grid or load side of hybrid inverter and there's a meter installed for the string inverter, then the hybrid inverter LCD will show the string inverter output power on its PV icon. Please make sure the meter can communicate with the hybrid inverter successfully.

③ Voltage, Current, Power for each MPPT.

④ Solar Panel energy for Day and Total.

Press the "Energy "button will enter into the power curve page.

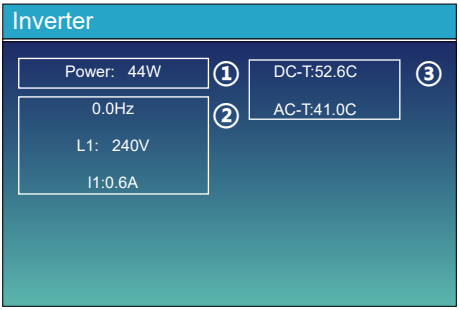

This is Inverter detail page.

① Inverter Generation.

② 0.0Hz: frequency after DC/AC.
Voltage, Current, Power for each Phase.

③ *DC-T: mean DC-DC temperature,
AC-T: mean Heat-sink temperature.
*Note: this part info is not avaiable for some LCD FW.

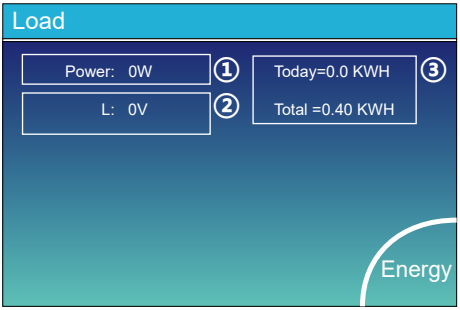

This is Load detail page.

① Load Power.

② Voltage, Power for each Phase.

③ Load consumption for Day and Total.

When you check "Selling First" or "Zero export to Load" on system work mode page, the information on this page is about backup load which connect on Load port of hybrid inverter.
When you check "Zero export to CT"on system work mode page, the information on this page is including backup load and home load.

Press the "Energy " button will enter into the power curve page.

This is Grid detail page.

① Status, Power, Frequency.

② L1&L2: Voltage for each Phase
CT1&CT2: External Current Sensor Power
LD1&LD2: Internal Current Sensor Power.

③ BUY: Energy from Grid to Inverter,
SELL: Energy from Inverter to Grid.

Press the "Energy " button will enter into the power curve page.

deye.shop · support@deye.shop · 8 800 201-76-60

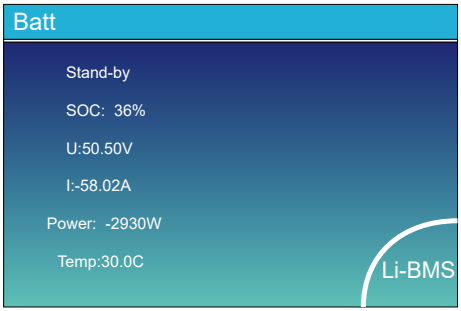

This is Battery detail page.

if you use Lithium Battery, you can enter BMS page.

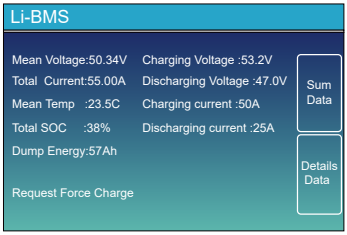

Request Force Charge: It indicates the BMS requests hybrid inverter to charge the battery actively.

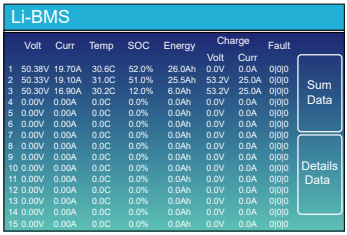

	Volt	Curr	Temp	SOC	Energy	Charge Volt	Charge Curr	Fault
1	50.38V	19.70A	30.6C	52.0%	26.0Ah	0.0V	0.0A	0|0|0
2	50.33V	19.10A	31.0C	51.0%	25.5Ah	53.2V	25.0A	0|0|0
3	50.30V	16.90A	30.2C	12.0%	6.0Ah	53.2V	25.0A	0|0|0
4	0.00V	0.00A	0.0C	0.0%	0.0Ah	0.0V	0.0A	0|0|0
5	0.00V	0.00A	0.0C	0.0%	0.0Ah	0.0V	0.0A	0|0|0
6	0.00V	0.00A	0.0C	0.0%	0.0Ah	0.0V	0.0A	0|0|0
7	0.00V	0.00A	0.0C	0.0%	0.0Ah	0.0V	0.0A	0|0|0
8	0.00V	0.00A	0.0C	0.0%	0.0Ah	0.0V	0.0A	0|0|0
9	0.00V	0.00A	0.0C	0.0%	0.0Ah	0.0V	0.0A	0|0|0
10	0.00V	0.00A	0.0C	0.0%	0.0Ah	0.0V	0.0A	0|0|0
11	0.00V	0.00A	0.0C	0.0%	0.0Ah	0.0V	0.0A	0|0|0
12	0.00V	0.00A	0.0C	0.0%	0.0Ah	0.0V	0.0A	0|0|0
13	0.00V	0.00A	0.0C	0.0%	0.0Ah	0.0V	0.0A	0|0|0
14	0.00V	0.00A	0.0C	0.0%	0.0Ah	0.0V	0.0A	0|0|0
15	0.00V	0.00A	0.0C	0.0%	0.0Ah	0.0V	0.0A	0|0|0

5.3 Curve Page-Solar & Load & Grid

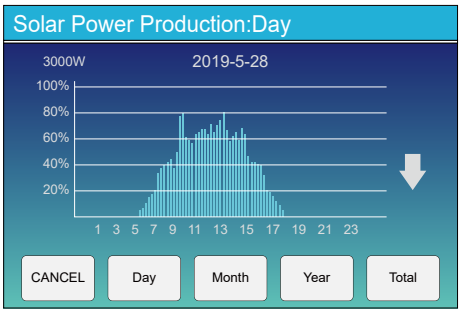

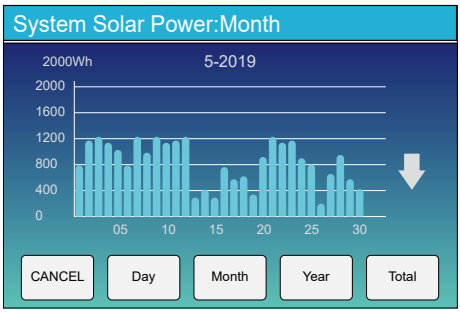

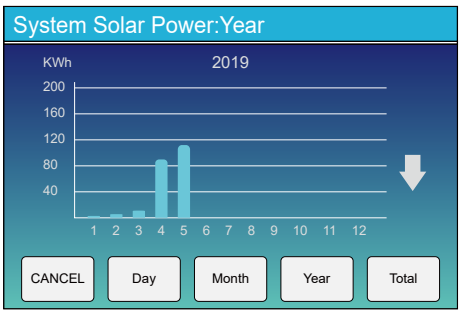

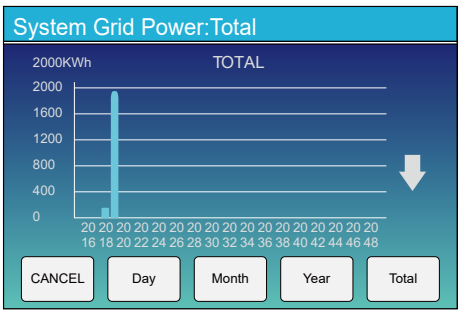

Solar power curve for daily, monthly, yearly and total can be roughly checked on the LCD, for more accuracy power generation, pls check on the monitoring system. Click the up and down arrow to check power curve of different period.

deye.shop · support@deye.shop · 8 800 201-76-60

5.4 System Setup Menu

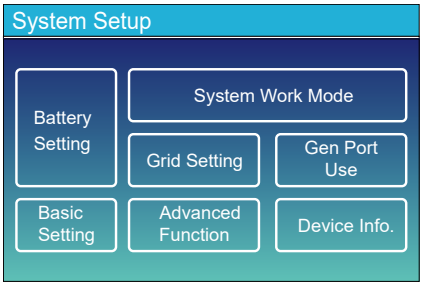

This is System Setup page.

5.5 Basic Setup Menu

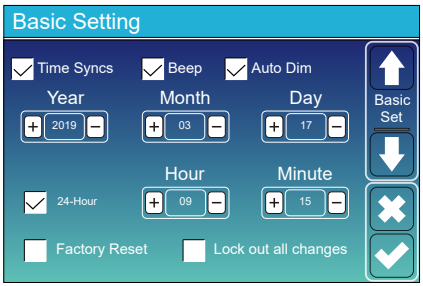

Factory Reset: Reset all parameters of the inverter.
Lock out all changes: Enable this menu for setting parameters that require locking and cannot be set up. Before performing a successful factory reset and locking the systems, to keep all changes you need to type in a password to enable the setting.
The password for factory settings is 9999 and for lock out is 7777.

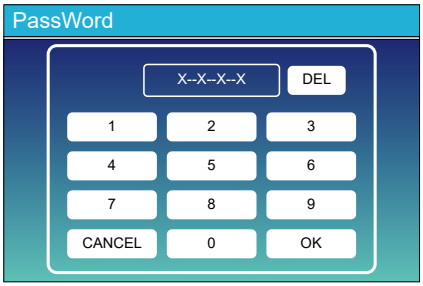

Factory Reset Password: 9999

Lock out all changes Password: 7777

System selfchek: After ticking this item, it needs input the password.
The default password is 1234

deye.shop · support@deye.shop · 8 800 201-76-60

5.6 Battery Setup Menu

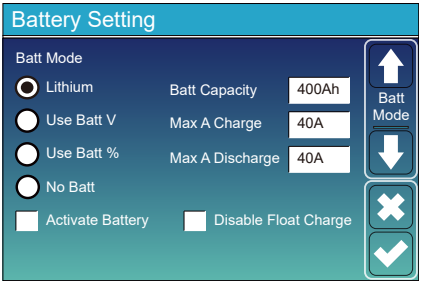

Battery capacity: it tells Deye hybrid inverter to know your battery bank size.
Use Batt V: Use Battery Voltage for all the settings (V).
Use Batt %: Use Battery SOC for all the settings (%).
Max. A charge/discharge: Max battery charge/discharge current(0-190A for 7.6/8kW model).
For AGM and Flooded, we recommend Ah battery size x 20%= Charge/Discharge amps.
. For Lithium, we recommend Ah battery size x 50% = Charge/Discharge amps.
. For Gel, follow manufacturer' s instructions.
No Batt: tick this item if no battery is connected to the system.

Active battery: This feature will help recover a battery that is over discharged by slowly charging from the solar array or grid.
Disable Float Charge: For the lithium battery with BMS communication, the inverter will keep the charging voltage at the current voltage when the BMS charging current requested is 0. It is used to help prevent battery from being overcharged.

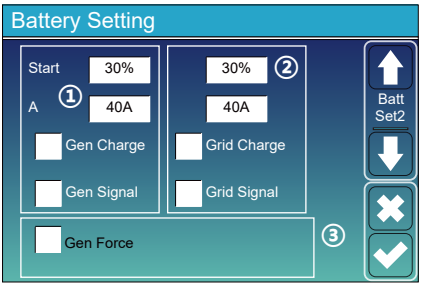

This is Battery Setup page. ① ③

Start =30%: Percent S.O.C at 30% system will AutoStart a connected generator to charge the battery bank.

A = 40A: Charge rate of 40A from the attached generator in Amps.

Gen Charge: uses the gen input of the system to charge battery bank from an attached generator.

Gen Signal: Normally open relay that closes when the Gen Start signal state is active.

Gen Force: When the generator is connected, it is forced to start the generator without meeting other conditions.

This is Grid Charge, you need select. ②

Start =30%: No use， Just for customization.

A = 40A: It indicates the Current that the Grid charges the Battery.

Grid Charge: It indicates that the grid charges the battery.
Grid Signal: Disable.

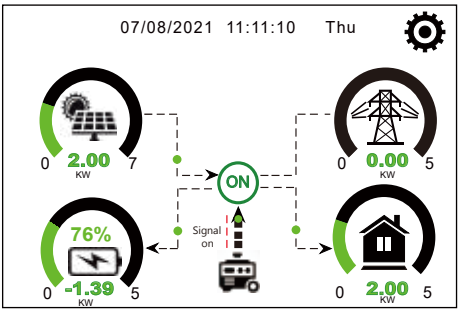

This page tells the PV and diesel generator power the load and battery.

deye.shop · support@deye.shop · 8 800 201-76-60

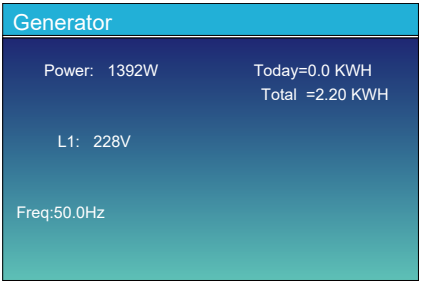

This page tells generator output voltage, frequency, power. And, how much energy is used from generator.

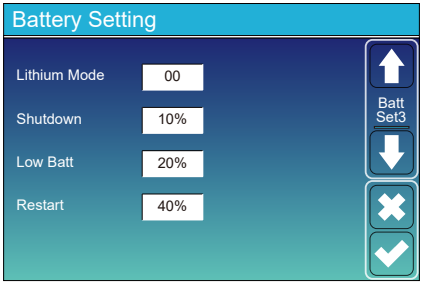

Lithium Mode: This is BMS protocol.Please reference the document(Approved Battery).

Shutdown 10%: It indicates the inverter will shutdown if the SOC below this value.

Low Batt 20%: It indicates the inverter will alarm if the SOC below this value.

Restart 40%: Battery voltage at 40% AC output will resume.

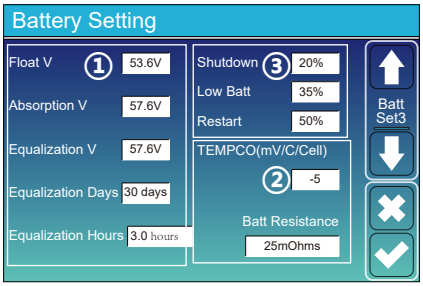

There are 3 stages of charging the Battery . ①

This is for professional installers, you can keep it if you do not know. ②

Shutdown 20%: The inverter will shutdown if the SOC below this value.

Low Batt 35%: The inverter will alarm if the SOC below this value. ③

Restart 50%: Battery SOC at 50% AC output will resume.

Recommended battery settings

Battery Type	*Absorption Stage*	*Float Stage*	*Equalization Voltage (every 30 days 3hr)*
AGM (or PCC)	14.2V (57.6V)	13.4V (53.6V)	14.2V (57.6V)
Gel	14.1V (56.4V)	13.5V (54.0V)	
Wet	14.7V (59.0V)	13.7V (55.0V)	14.7V (59.0V)
Lithium	Follow its BMS voltage parameters		

deye.shop · support@deye.shop · 8 800 201-76-60

5.7 System Work Mode Setup Menu

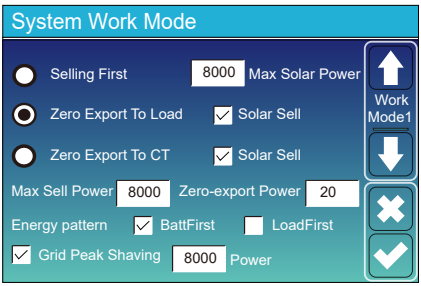

Work Mode

Selling First: This Mode allows hybrid inverter to sell back any excess power produced by the solar panels to the grid. If time of use is active, the battery energy also can be sold into grid.

The PV energy will be used to power the load and charge the battery and then excess energy will flow to grid.

Power source priority for the load is as follows:

1. Solar Panels.
2. Grid.
3. Batteries (until programable % discharge is reached).

Zero Export To Load: Hybrid inverter will only provide power to the backup load connected. The hybrid inverter will neither provide power to the home load nor sell power to grid. The built-in CT will detect power flowing back to the grid and will reduce the power of the inverter only to supply the local load and charge the battery.

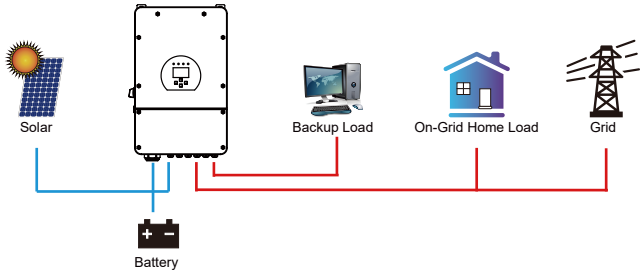

Zero Export To CT: Hybrid inverter will not only provide power to the backup load connected but also give power to the home load connected. If PV power and battery power is insufficient, it will take grid energy as supplement. The hybrid inverter will not sell power to grid. In this mode, a CT is needed. The installation method of the CT please refer to chapter 3.6 CT Connection. The external CT will detect power flowing back to the grid and will reduce the power of the inverter only to supply the local load, charge battery and home load.

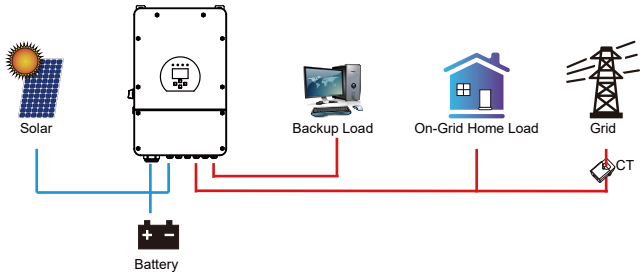

deye.shop · support@deye.shop · 8 800 201-76-60

Solar Sell: “Solar sell” is for Zero export to load or Zero export to CT: when this item is active, the surplus energy can be sold back to grid. When it is active, PV Power source priority usage is as follows: load consumption and charge battery and feed into grid.

Max. sell power: Allowed the maximum output power to flow to grid.

Zero-export Power: for zero-export mode, it tells the grid output power. Recommend to set it as 20-100W to ensure the hybrid inverter won' t feed power to grid.

Energy Pattern: PV Power source priority.

Batt First: PV power is firstly used to charge the battery and then used to power the load. If PV power is insufficient, grid will make supplement for battery and load simultaneously.

Load First: PV power is firstly used to power the load and then used to charge the battery. If PV power is insufficient, grid will make supplement for battery and load simultaneously.

Max Solar Power: allowed the maximum DC input power.

Grid Peak-shaving: when it is active, grid output power will be limited within the set value. If the load power exceeds the allowed value, it will take PV energy and battery as supplement. If still can’t meet the load requirement, grid power will increase to meet the load needs.

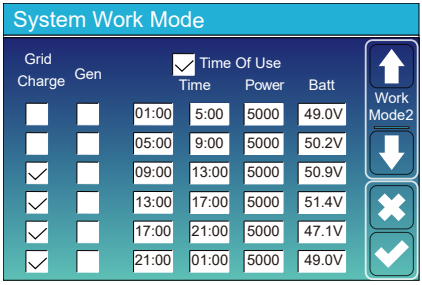

Time of use: it is used to program when to use grid or generator to charge the battery, and when to discharge the battery to power the load. Only tick "Time Of Use" then the follow items (Grid, charge, time, power etc.) will take effect.
Note: when in selling first mode and click time of use, the battery power can be sold into grid.
Grid charge: utilize grid to charge the battery in a time period.
Gen charge: utilize diesel generator to charge the battery in a time period.
Time: real time, range of 01:00-24:00.
Power: Max. discharge power of battery allowed.
Batt(V or SOC %): battery SOC % or voltage at when the action is to happen.

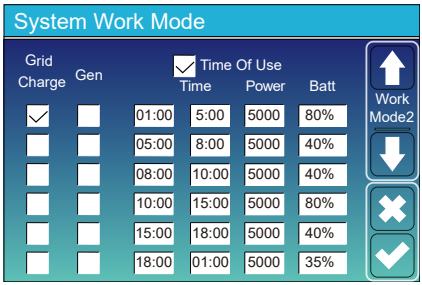

For example:

During 01:00-05:00, when battery SOC is lower than 80%, it will use grid to charge the battery until battery SOC reaches 80%.

During 05:00-08:00 and 08:00-10:00, when battery SOC is higher than 40%, hybrid inverter will discharge the battery until the SOC reaches 40%.

During 10:00-15:00, when battery SOC is higher than 80%, hybrid inverter will discharge the battery until the SOC reaches 80%.

During 15:00-18:00, when battery SOC is higher than 40%, hybrid inverter will discharge the battery until the SOC reaches 40%.

During 18:00-01:00, when battery SOC is higher than 35%, hybrid inverter will discharge the battery until the SOC reaches 35%.

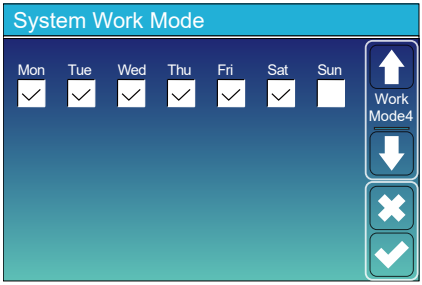

It allows users to choose which day to execute the setting of “Time of Use”.
For example, the inverter will execute the time of use page on Mon/Tue/Wed/Thu/Fri/Sat only.

deye.shop · support@deye.shop · 8 800 201-76-60

5.8 Grid Setup Menu

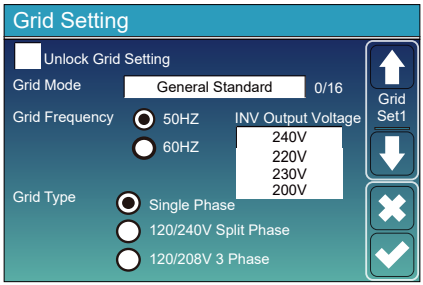

Unlock Grid Setting: before changing the grid parameters, please enable this with password of 7777. Then it is allowed to change the grid parameters.

Grid Mode: General Standard、UL1741 & IEEE1547、CPUC RULE21、SRD-UL-1741、CEI 0-21、EN50549_CZ、Australia_A、Australia_B、Australia_C、NewZealand、VDE4105、OVE_Directive_R25、EN50549_CZ_PPDS_L16A、NRS097、G98/G99、G98/G99_NI、ESB Networks(Ireland). Please follow the local grid code and then choose the corresponding grid standard.

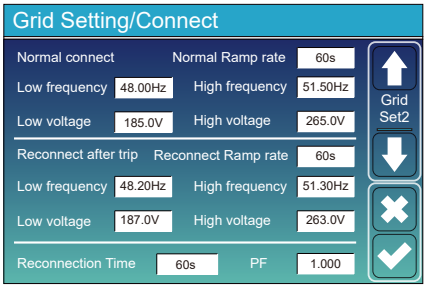

Normal connect: The allowed grid voltage/frequency range when the inverter first time connect to the grid.
Normal Ramp rate: It is the startup power ramp.

Reconnect after trip: The allowed grid voltage /frequency range for the inverter connects the grid after the inverter trip from the grid.
Reconnect Ramp rate:It is the reconnection power ramp.

Reconnection time: The waiting time period for the inverter connects the grid again.
PF: Power factor which is used to adjust inverter reactive power.

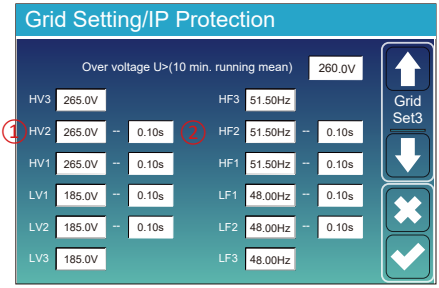

HV1: Level 1 overvoltage protection point;
1 **HV2:** Level 2 overvoltage protection point; 2 0.10s—Trip time.
HV3: Level 3 overvoltage protection point.

LV1: Level 1 undervoltage protection point;
LV2: Level 2 undervoltage protection point;
LV3: Level 3 undervoltage protection point.

HF1: Level 1 over frequency protection point;
HF2: Level 2 over frequency protection point;
HF3: Level 3 over frequency protection point.

LF1: Level 1 under frequency protection point;
LF2: Level 2 under frequency protection point;
LF3: Level 3 under frequency protection point.

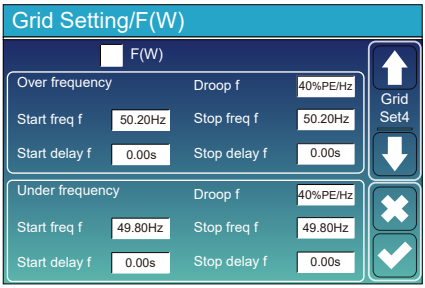

FW: this series inverter is able to adjust inverter output power according to grid frequency.
Droop f: percentage of nominal power per Hz
For example, “Start freq f＞50.2Hz, Stop freq f＜50.2, Droop f=40%PE/Hz” when the grid frequency reaches 50.2Hz, the inverter will decrease its active power at Droop f of 40%. And then when grid system frequency is less than 50.2Hz, the inverter will stop decreasing output power.
For the detailed setup values, please follow the local grid code.

deye.shop · support@deye.shop · 8 800 201-76-60

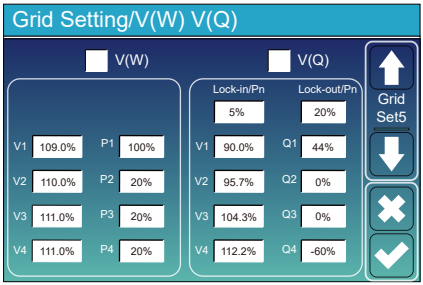

V(W): It is used to adjust the inverter active power according to the set grid voltage.
V(Q): It is used to adjust the inverter reactive power according to the set grid voltage.
This function is used to adjust inverter output power (active power and reactive power) when grid voltage changes.

Lock-in/Pn 5%: When the inverter active power is less than 5% rated power, the VQ mode will not take effect.
Lock-out/Pn 20%: If the inverter active power is increasing from 5% to 20% rated power, the VQ mode will take effect again.

For example: V2=110%, P2=20%. When the grid voltage reaches the 110% times of rated grid voltage, inverter output power will reduce its active output power to 20% rated power.
For example: V1=90%, Q1=44%. When the grid voltage reaches the 90% times of rated grid voltage, inverter output power will output 44% reactive output power.
For the detailed setup values, please follow the local grid code.

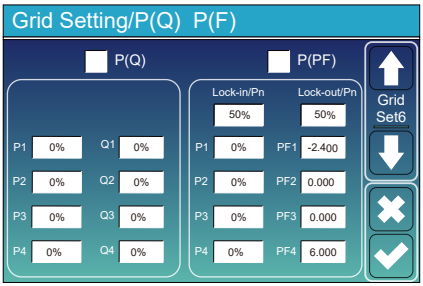

P(Q): It is used to adjust the inverter reactive power according to the set active power.
P(PF): It is used to adjust the inverter PF according to the set active power.
For the detailed setup values, please follow the local grid code.

Lock-in/Pn 50%: When the inverter output active power is less then 50% rated power, it won't enter the P(PF) mode.
Lock-out/Pn 50%: When the inverter output active power is higher then 50% rated power, it will enter the P(PF) mode.
Note : only when the grid voltage is equal to or higher than 1.05times of rated grid voltage, then the P(PF) mode will take effect.

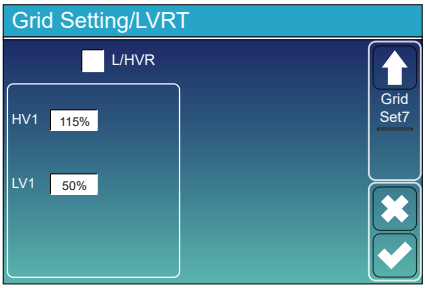

Reserved: This function is reserved.It is not recommended.

5.9 Generator Port Use Setup Menu

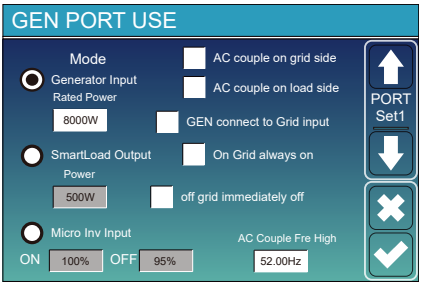

Generator input rated power: allowed Max. power from diesel generator.
GEN connect to grid input: connect the diesel generator to the grid input port.
Smart Load Output: This mode utilizes the Gen input connection as an output which only receives power when the battery SOC and PV power is above a user programmable threshold.
e.g. Power=500W, ON: 100%, OFF=95%: When the PV power exceeds 500W, and battery bank SOC reaches 100%, Smart Load Port will switch on automatically and power the load connected. When the battery bank SOC < 95% or PV power < 500w, the Smart Load Port will switch off automatically.

deye.shop · support@deye.shop · 8 800 201-76-60

Smart Load OFF Batt
• Battery SOC at which the Smart load will switch off.
Smart Load ON Batt
• Battery SOC at which the Smart load will switch on. Also, the PV input power should exceed the setting value (Power) simultaneously and then the Smart load will switch on.
On Grid always on: When click "on Grid always on" the smart load will switch on when the grid is present.
off grid immediately off: the smart load will stop working immediately when the grid is disconnected if this item is active.
Micro Inv Input: To use the Generator input port as a micro-inverter on grid inverter input (AC coupled), this feature will also work with "Grid-Tied" inverters.

* **Micro Inv Input OFF**: when the battery SOC exceeds setting value, Microinveter or grid-tied inverter will shut down.
* **Micro Inv Input ON**: when the battery SOC is lower than setting value, Microinveter or grid-tied inverter will start to work.

AC Couple Fre High: If choosing"Micro Inv input", as the battery SOC reaches gradually setting value (OFF), During the process, the microinverter output power will decrease linear. When the battery SOC equals to the setting value (OFF), the system frequency will become the setting value (AC couple Fre high) and the Microinverter will stop working. Stop exporting power produced by the microinverter to the grid.

* **Note**: Micro Inv Input OFF and On is valid for some certain FW version only.
* **AC couple on load side**: connecting the output of on-grid inverter at the load port of the hybrid inverter. In this situation, the hybrid inverter will not able to show the load power correctly.
* **AC couple on grid side**: this function is reserved.
* **Note**: Some firmware versions don't have this function.

5.10 Advanced Function Setup Menu

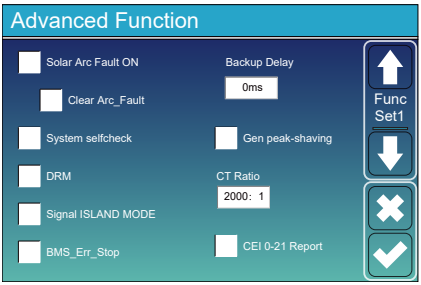

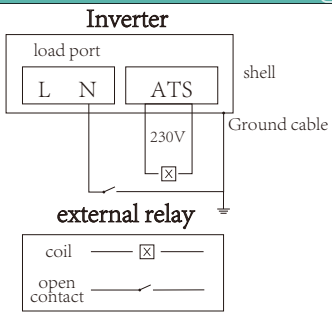

Solar Arc Fault ON: This is only for US.
System selfcheck: Disable. this is only for factory.
Gen Peak-shaving: Enable When the power of the generator exceeds the rated value of it, the inverter will provide the redundant part to ensure that the generator will not overload.
DRM: For AS4777 standard.
Backup Delay: When the grid cuts off, the inverter will give output power after the setting time.
For example, backup delay: 3ms. the inverter will give output power after 3ms when the grid cuts off.
Note: for some old FW version, the function is not available.
BMS_Err_Stop: When it is active, if the battery BMS failed to communicate with inverter, the inverter will stop working and report fault.
Signal ISLAND MODE: when "signal island mode" is checked and the inverter connects the grid, the ATS port voltage will be 0. When "signal island mode" is checked and the inverter disconnected from the grid, the ATS port voltage will output 230Vac voltage. With this feature and outside NO type relay, it can realize N and PE disconnection or bond.
More details, please refer to left side picture.

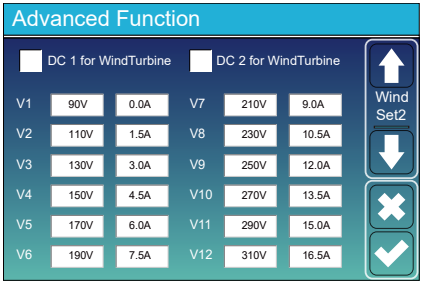

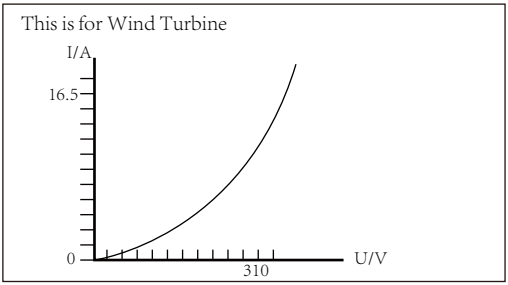

deye.shop · support@deye.shop · 8 800 201-76-60

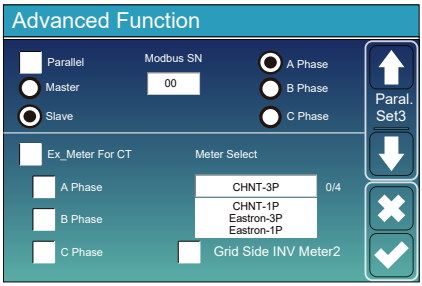

Ex_Meter For CT: when in Three phase system with CHNT Three phase energy meter (DTSU666), click corresponding phase where hybrid inverter is connected. e.g. when the hybrid inverter output connects to A phase, please click A Phase.
Meter Select: select the corresponding meter type according to the meter installed in the system.
Grid Side INV Meter2: when there's a string inverter AC couple at the grid or load side of hybrid inverter and there's a meter installed for the string inverter, then the hybrid inverter LCD will show the string inverter output power on its PV icon. Please make sure the meter can communicate with the hybrid inverter successfully.

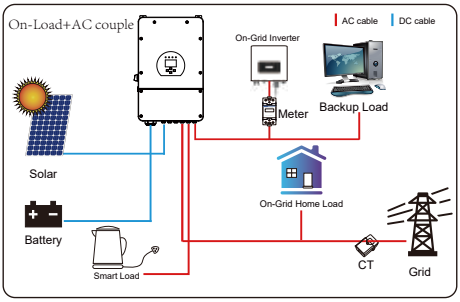

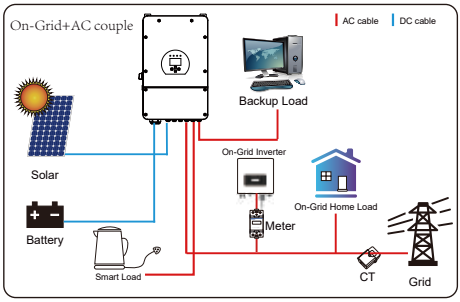

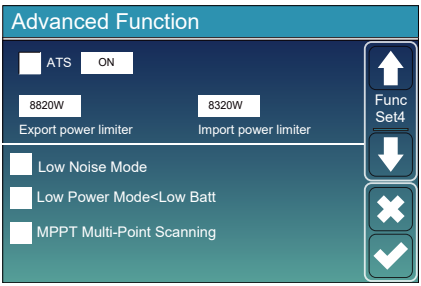

ATS: It is related with ATS port voltage. it is better in "uncheck" position.
Export power limter: It is used to setup the allowed the maximum output power to flow to grid.
Import power limiter: when it is active, the grid output power will be limited. its priority is lower then "grid peak shaving" if the "grid peak shaving" is selected.
Low Noise Mode: In this mode, inverter will work in "low noise mode".
Low Power Mode<Low Batt: if selected and when battery SOC is less then "Low Bat" value, the self-consumption power of inverter will be from grid and battery simultaneously. If unselected, the self-consumption power of inverter will be mainly from grid.
MPPT Multi-Point Scanning: it will check whether the I/V of PV is working on its Max. power point. If not, then it will adjust I/V to the Max. power point.

5.11 Device Info Setup Menu

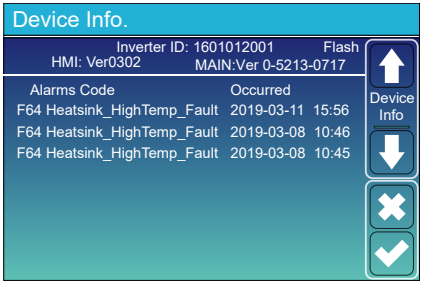

This page show Inverter ID, Inverter version and alarm codes.

HMI: LCD version

MAIN: Control board FW version

6. Mode

deye.shop · support@deye.shop · 8 800 201-76-60

Mode I:Basic

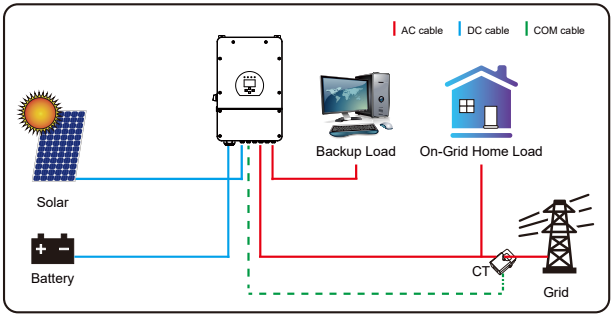

Mode II: With Generator

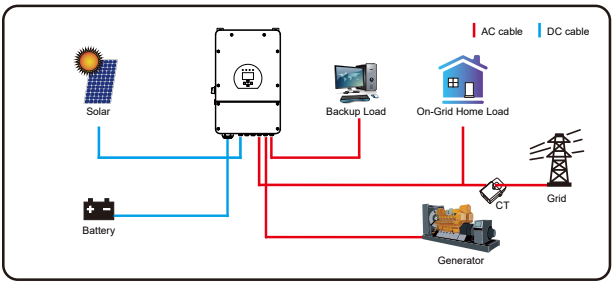

Mode III: With Smart-Load

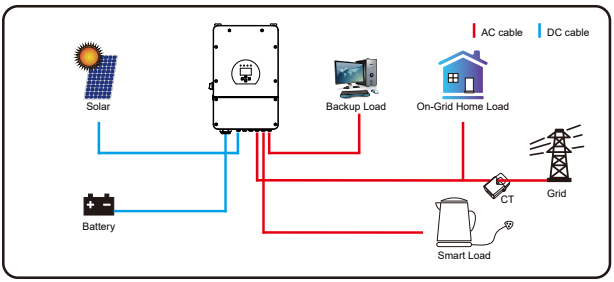

Mode IV: AC Couple

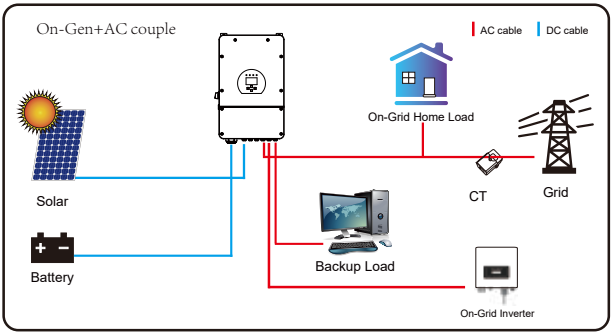

deye.shop · support@deye.shop · 8 800 201-76-60

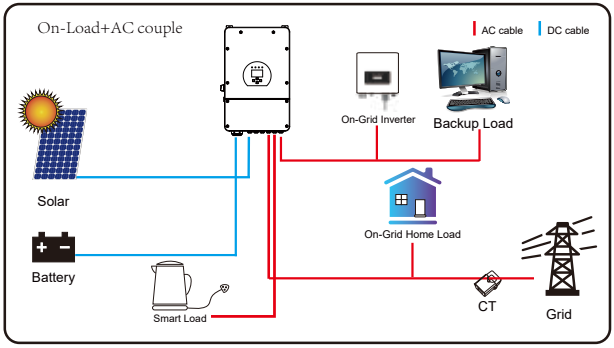

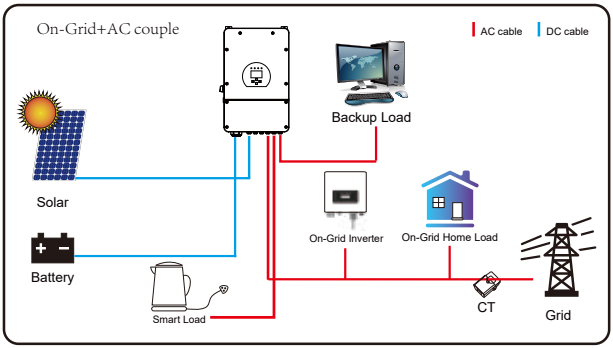

The 1st priority power of the system is always the PV power, then 2nd and 3rd priority power will be the battery bank or grid according to the settings. The last power backup will be the Generator if it is available.

7. Fault information and processing

The energy storage inverter is designed according to the grid-connected operation standard and meets the safety requirements and electromagnetic compatibility requirements. Before leaving the factory, the inverter undergoes several rigorous tests to ensure that the inverter can operate reliably.

If any of the fault messages listed in Table 7-1 appear on your inverter and the fault has not been removed after restarting, please contact your local dealer or service center. You need to have the following information ready.

1. Inverter serial number;
2. Distributor or service center of the inverter ;
3. On-grid power generation date;
4. The problem description (including the fault code and indicator status displayed on the LCD) is as detailed as possible.
5. Your contact information.In order to give you a clearer understanding of the inverter's fault information, we will list all possible fault codes and their descriptions when the inverter is not working properly.

deye.shop · support@deye.shop · 8 800 201-76-60

Error code	Description	Solutions
F08	GFDI _Relay_Failure	1. When inverter is in Split phase(120/240Vac) or three-phase system (120/208Vac) system, the backup load port N line needs to connect ground; 2. If the fault still exists, please contact us for help.
F13	Working mode change	1. When the grid type and frequency changed it will report F13; 2. When the battery mode was changed to "No battery" mode, it will report F13; 3. For some old FW version, it will report F13 when the system work mode changed; 4, Generally, it will disappear automatically when shows F13; 5. If still same, and turn off the DC switch and AC switch and wait for one minute and then turn on the DC/AC switch; 6. Seek help from us, if can not go back to normal state.
F18	AC over current fault of hardware	AC side over current fault 1. Please check whether the backup load power and common load power are within the range; 2. Restart and check whether it is in normal; 3. Seek help from us, if can not go back to normal state.
F20	DC over current fault of the hardware	DC side over current fault 1. Check PV module connect and battery connect; 2. When in the off-grid mode, the inverter startup with big power load, it may report F20. Please reduce the load power connected; 3. Turn off the DC switch and AC switch and then wait one minute,then turn on the DC/AC switch again; 4. Seek help from us, if can not go back to normal state.
F22	Tz_EmergStop_Fault	Please contact your installer for help.
F23	AC leakage current is transient over current	Leakage current fault 1. Check PV side cable ground connection. 2. Restart the system 2~3 times. 3. If the fault still exists, please contact us for help.
F24	DC insulation impedance failure	PV isolation resistance is too low 1. Check the connection of PV panels and inverter is firmly and correctly; 2. Check whether the PE cable of inverter is connected to ground; 3. Seek help from us, if can not go back to normal state.
F26	The DC busbar is unbalanced	1. Please wait for a while and check whether it is normal; 2. When the hybrid in split phase mode, and the load of L1 and load of L2 is big different, it will report the F26. 3. Restart the system 2~3 times. 4. Seek help from us, if can not go back to normal state.
F29	Parallel CANBus fault	1. When in parallel mode, check the parallel communication cable connection and hybrid inverter communication address setting; 2. During the parallel system startup period, inverters will report F29. when all inverters are in ON status, it will disappear automatically; 3. If the fault still exists, please contact us for help.

deye.shop · support@deye.shop · 8 800 201-76-60

Error code	Description	Solutions
F34	AC Overcurrent fault	1. Check the backup load connected, make sure it is in allowed power range; 2. If the fault still exists, please contact us for help.
F35	No AC grid	No Utility 1. Please confirm grid is lost or not; 2. Check the grid connection is good or not; 3. Check the switch between inverter and grid is on or not; 4. Seek help from us, if can not go back to normal state.
F41	Parallel system stop	1. Check the hybrid inverter working status. If there's 1 pcs hybrid inverter is in OFF status, the other hybrid inverters may report F41 fault in parallel system. 2. If the fault still exists, please contact us for help.
F42	AC line low voltage	Grid voltage fault 1. Check the AC voltage is in the range of standard voltage in specification; 2. Check whether grid AC cables are firmly and correctly connected; 3. Seek help from us, if can not go back to normal state.
F47	AC over frequency	Grid frequency out of range 1. Check the frequency is in the range of specification or not; 2. Check whether AC cables are firmly and correctly connected; 3. Seek help from us, if can not go back to normal state.
F48	AC lower frequency	Grid frequency out of range 1. Check the frequency is in the range of specification or not; 2. Check whether AC cables are firmly and correctly connected; 3. Seek help from us, if can not go back to normal state.
F56	DC busbar voltage is too low	Battery voltage low 1. Check whether battery voltage is too low; 2. If the battery voltage is too low, using PV or grid to charge the battery; 3. Seek help from us, if can not go back to normal state.
F58	BMS communication fault	1. it tells the communication between hybrid inverter and battery BMS disconnected when"BMS_Err-Stop" is active; 2. if don't want to see this happen, you can disable "BMS_Err-Stop" item on the LCD; 3. If the fault still exists, please contact us for help.
F63	ARC fault	1. ARC fault detection is only for US market; 2. Check PV module cable connection and clear the fault; 3. Seek help from us, if can not go back to normal state.
F64	Heat sink high temperature failure	Heat sink temperature is too high 1. Check whether the work environment temperature is too high; 2. Turn off the inverter for 10mins and restart; 3. Seek help from us, if can not go back to normal state.

Chart 7-1 Fault information

deye.shop · support@deye.shop · 8 800 201-76-60

Under the guidance of our company, customers return our products so that our company can provide service of maintenance or replacement of products of the same value. Customers need to pay the necessary freight and other related costs. Any replacement or repair of the product will cover the remaining warranty period of the product. If any part of the product or product is replaced by the company itself during the warranty period, all rights and interests of the replacement product or component belong to the company.
Factory warranty does not include damage due to the following reasons:

· Damage during transportation of equipment;
· Damage caused by incorrect installation or commissioning;
· Damage caused by failure to comply with operation instructions, installation instructions or maintenance instructions;
· Damage caused by attempts to modify, alter or repair products;
· Damage caused by incorrect use or operation;
· Damage caused by insufficient ventilation of equipment;
· Damage caused by failure to comply with applicable safety standards or regulations;
· Damage caused by natural disasters or force majeure (e.g. floods, lightning, overvoltage, storms, fires, etc.)

In addition, normal wear or any other failure will not affect the basic operation of the product. Any external scratches, stains or natural mechanical wear does not represent a defect in the product.

8.Limitation of Liability

In addition to the product warranty described above, the state and local laws and regulations provide financial compensation for the product's power connection (including violation of implied terms and warranties). The company hereby declares that the terms and conditions of the product and the policy cannot and can only legally exclude all liability within a limited scope.

deye.shop · support@deye.shop · 8 800 201-76-60

9. Datasheet

Model	*SUN-7.6K-SG01LP1-EU*	*SUN-8K-SG01LP1-EU*
Battery Input Data		
Battery Type	Lead-acid or Lithium-ion	
Battery Voltage Range(V)	40-60	
Max. Charging Current(A)	190	190
Max. Discharging Current(A)	190	190
Charging Strategy for Li-Ion Battery	Self-adaption to BMS	
Number of Battery Input	1	
PV String Input Data		
Max. PV Input Power(W)	9880	10400
Max. PV Input Voltage(V)	500	
Start-up Voltage(V)	125	
PV Input Voltage Range(V)	125-500	
MPPT Voltage Range(V)	150-425	
Full Load MPPT Voltage Range(V)	200-425	
Rated PV Input Voltage(V)	370	
Max. Operating PV Input Current(A)	26+26	
Max. Input Short-Circuit Current(A)	44+44	
No. of MPP Trackers/No. of Strings MPP Tracker	2/2+2	
Max. Inverter Backfeed Current to The Array	0	
AC Input/Output Data		
Rated AC Input/Output Active Power(W)	7600	8000
Max. AC Input/Output Apparent Power(VA)	8360	8800
Peak Power (off-grid)(W)	2 times of rated power, 10s	
Rated AC Input/Output Current(A)	34.5/33	36.4/34.8
Max. AC Input/Output Current(A)	38/36.3	40/38.3
Max. Continuous AC Passthrough (grid to load)(A)	50	
Max. Output Fault Current(A)	76	80
Max. Output Overcurrent Protection(A)	145	
Rated Input/Output Voltage/Range(V)	220V/230V 0.85Un-1.1Un	
Grid Connection Form	L+N+PE	
Rated Input/Output Grid Frequency/Range	50Hz/45Hz-55Hz 60Hz/55Hz-65Hz	
Power Factor Adjustment Range	0.8 leading-0.8lagging	
Total Current Harmonic Distortion THDi	<3% (of nominal power)	
DC Injection Current	<0.5%In	
Efficiency		
Max. Efficiency	97.60%	
Euro Efficiency	96.50%	
MPPT Efficiency	>99%	
Equipment Protection		
DC Polarity Reverse Connection Protection	Yes	
AC Output Overcurrent Protection	Yes	
AC Output Overvoltage Protection	Yes	
AC Output Short Circuit Protection	Yes	
Thermal Protection	Yes	
DC Terminal Insulation Impedance Monitoring	Yes	

deye.shop · support@deye.shop · 8 800 201-76-60

DC Component Monitoring	Yes
Ground Fault Current Monitoring	Yes
Arc fault circuit interrupter (AFCI)	Optional
Power Network Monitoring	Yes
Island Protection Monitoring	Yes
Earth Fault Detection	Yes
DC Input Switch	Yes
Overvoltage Load Drop Protection	Yes
Residual Current (RCD) Detection	Yes
Surge Protection Level	TYPE II(DC), TYPE II(AC)
Interface	
Display	LCD+LED
Communication Interface	RS232, RS485, CAN
Monitor Mode	GPRS/WIFI/Bluetooth/4G/LAN(optional)
General Data	
Operating Temperature Range	-40 to +60℃, >45℃ Derating
Permissible Ambient Humidity	0-100%
Permissible Altitude	2000m
Noise	<30 dB
Ingress Protection(IP) Rating	IP 65
Inverter Topology	Non-Isolated
Over Voltage Category	OVC II(DC), OVC III(AC)
Cabinet size(W*H*D) [mm]	420W×670H×233D (Excluding connectors and brackets)
Weight(kg)	30
Warranty	5 Years/10 Years the Warranty Period Depends the Final Installation Site of Inverter, More Info Please Refer to Warranty Policy
Type of Cooling	Intelligent Air Cooling
Grid Regulation	EN 50549,UNE 217002,NRS 097,IEEE 1547.1,SRD V2.0
Safety EMC/Standard	IEC/EN 61000-6-1/2/3/4, IEC/EN 62109-1, IEC/EN 62109-2, FCC,UL 1741

deye.shop · support@deye.shop · 8 800 201-76-60

10. Appendix I

Definition of RJ45 Port Pin for BMS

No.	BMS Pin
1	485_B
2	485_A
3	GND_485
4	CAN-H
5	CAN-L
6	GND_485
7	485_A
8	485_B

BMS Port

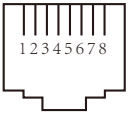

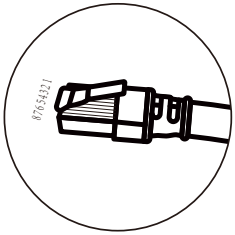

This port is used to connect the energy meter.
Note: some hardware versions hybrid inverter don't support conencting the energy meter

No.	Meter_CON Pin
1	SUNSPE-485_B
2	SUNSPE-485_A
3	--
4	--
5	--
6	--
7	SUNSPE-485_A
8	SUNSPE-485_B

Meter_CON port

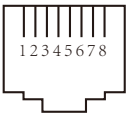

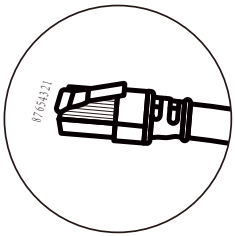

deye.shop · support@deye.shop · 8 800 201-76-60

No.	DRM Pin
1	DRM1/5
2	DRM2/6
3	DRM3/7
4	DRM4/8
5	REF-GEN/0
6	D-GND
7	NetJ4_7
8	NetJ4_7

DRM Port

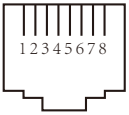

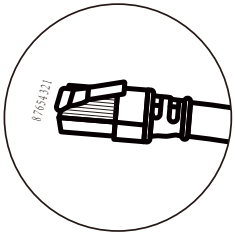

deye.shop · support@deye.shop · 8 800 201-76-60

RS232

No.	WIFI/RS232
1	
2	TX
3	RX
4	
5	D-GND
6	
7	
8	
9	12Vdc

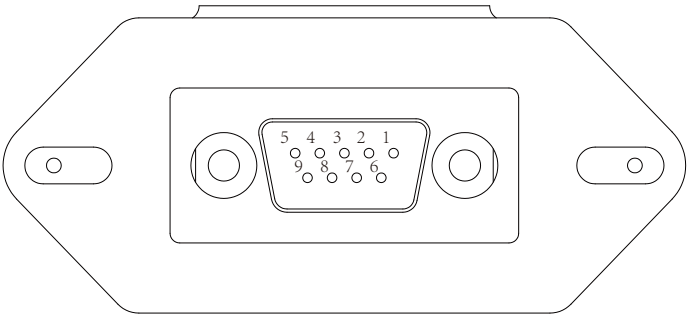

WIFI/RS232

This RS232 port is used to connect the wifi datalogger

deye.shop · support@deye.shop · 8 800 201-76-60

11. Appendix II

1. Split Core Current Transformer (CT) dimension: (mm)
2. Secondary output cable length is 4m.

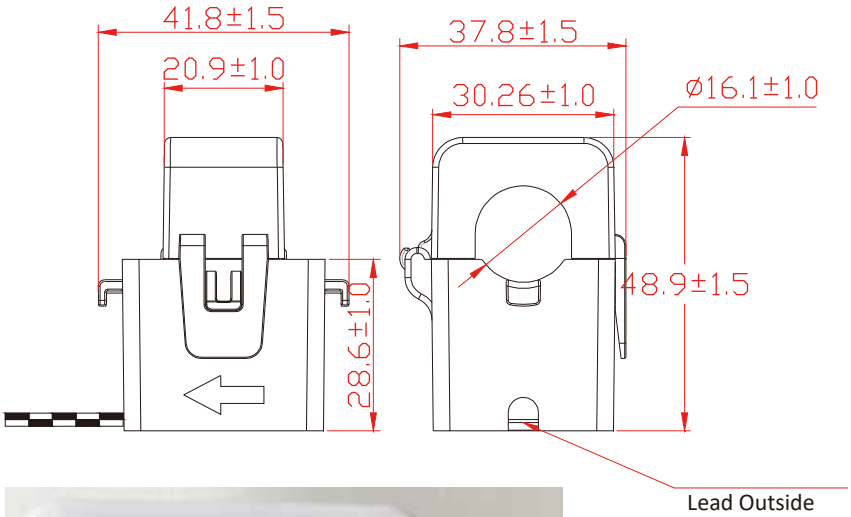

12. EU Declaration of Conformity

within the scope of the EU directives

- Electromagnetic compatibility 2014/30/EU (EMC)
- Low Voltage Directive 2014/35/EU (LVD)
- Restriction of the use of certain hazardous substances 2011/65/EU (RoHS)

NINGBO DEYE INVERTER TECHNOLOGY CO., LTD. confirms herewith that the products described in this document are in compliance with the fundamental requirements and other relevant provisions of the above mentioned directives. The entire EU Declaration of Conformity and certificate can be found at https://www.deyeinverter.com/download/#hybrid-inverter-5.

deye.shop · support@deye.shop · 8 800 201-76-60

231010002
www.deyeinverter.com

EU Declaration of Conformity

Product: **Hybrid Inverter**
Models: SUN-3.6K-SG01LP1-EU;SUN-5K-SG01LP1-EU;SUN-6K-SG01LP1-EU;
SUN-7.6K-SG01LP1-EU;SUN-8K-SG01LP1-EU;

Name and address of the manufacturer: Ningbo Deye Inverter Technology Co., Ltd.
No. 26 South YongJiang Road, Daqi, Beilun, NingBo, China

This declaration of conformity is issued under the sole responsibility of the manufacturer. Also this product is under manufacturer's warranty.
This declaration of conformity is not valid any longer: if the product is modified, supplemented or changed in any other way, as well as in case the product is used or installed improperly.

The object of the declaration described above is in conformity with the relevant Union harmonization legislation: The Low Voltage Directive (LVD) 2014/35/EU;the Electromagnetic Compatibility (EMC) Directive 2014/30/EU;the restriction of the use of certain hazardous substances (RoHS) Directive 2011/65/EU.

References to the relevant harmonized standards used or references to the other technical specifications in relation to which conformity is declared:

LVD:	
EN 62109-1:2010	●
EN 62109-2:2011	●
EMC:	
EN IEC 61000-6-1:2019	●
EN IEC 61000-6-2:2019	●
EN IEC 61000-6-3:2021	●
EN IEC 61000-6-4:2019	●
EN IEC 61000-3-2: 2019+A1:2021	●
EN 61000-3-3:2013/A2:2021/AC:2022-01	●
EN IEC 61000-3-11:2019	●
EN 61000-3-12:2011	●
EN 55011:2016/A2:2021	●

Nom et Titre / Name and Title:

Bard Dai
Senior Standard and Certification Engineer

Au nom de / On behalf of:
Date / Date (yyyy-mm-dd):
A / Place:

Ningbo Deye Inverter Technology Co., Ltd.
2023-10-10
Ningbo, China

EU DoC – *v1*

Ningbo Deye Inverter Technology Co., Ltd.
No. 26 South YongJiang Road, Daqi, Beilun, NingBo, China

2024-07-30

NINGBO DEYE INVERTER TECHNOLOGY CO., LTD.

Add.: No.26 South YongJiang Road, Daqi, Beilun, NingBo, China.

Tel.: +86 (0) 574 8622 8957

Fax.: +86 (0) 574 8622 8852

E-mail: service@deye.com.cn

Web.: www.deyeinverter.com

deye.shop · support@deye.shop · 8 800 201 76 60

deye.shop

Поддержка на русском — deye.shop

Официальный дилер Deye в России — ООО «НТ»

Мы отвечаем на русском языке по любому оборудованию Deye из этого документа.

- Подберём инвертор и аккумуляторы под ваш дом или объект.
- Ответим на вопросы по монтажу, настройке и кодам ошибок.
- Поможем с гарантийным обращением.

Телефон	8 (800) 201-76-60, звонок по России бесплатный
Техническая поддержка	support@deye.shop
Заказы и счета	zakaz@deye.shop
Сайт	deye.shop

На сайте — документы на русском, цены с НДС и наличие на складах в Ростове-на-Дону, Подмосковье и Краснодаре. Работаем в будни с 9:00 до 18:00 по Москве.