Hybrid Inverter

SUN-60K-SG02HP3-EU-EM6

SUN-70K-SG02HP3-EU-EM6

SUN-75K-SG02HP3-EU-EM6

SUN-80K-SG02HP3-EU-EM6

User Manual

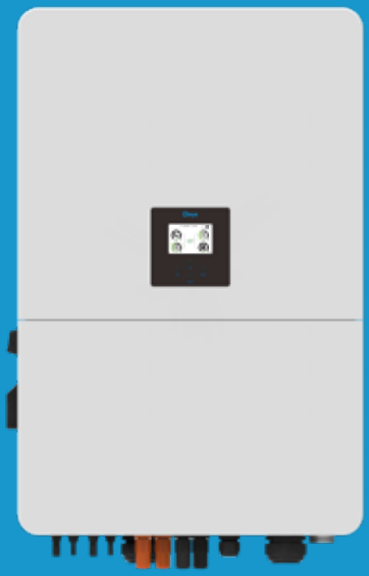

deye.shop · support@deye.shop · 8 800 303-76-68

Contents

1. Safety Introductions 01-02
2. Product instructions 02-06
2.1 Product Overview
2.2 Product Size
2.3 Product Features
2.4 Basic System Architecture
2.5 Product handling requirements
3. Installation 06-30
3.1 Parts list
3.2 Mounting instructions
3.3 Function port definition
3.4 Battery connection
3.5Grid connection and backup load connection
3.6 PV Connection
3.7 Meter or CT installation
3.8 Earth Connection(mandatory)
3.9 Data logger connection
3.10 Wiring diagram with neutral line grounded
3.11 Wiring diagram with neutral line ungrounded
3.12 Typical application diagram of on-grid system
3.13 Typical application diagram of diesel generator
3.14 Three phase parallel connection diagram
4. OPERATION 31
4.1 Power ON/OFF
4.2 Operation and Display Panel
5. LCD Display Icons 32-46
5.1 Main Screen
5.2 Detail page
5.3 Curve Page-Solar & Load & Grid
5.4 System Setup Menu
5.5 Basic Setting Menu
5.6 Battery Setting Menu
5.7 System Work Mode Setup Menu
5.8 Grid Setting Menu
5.9 Generator Port Use Setup Menu
5.10 Advanced Function Setup Menu
5.11 Device Info Menu
6. Mode 46-47
7. Warranty 47-48
8. Troubleshooting 48-53
9. Datasheet 54-55
10. Appendix I 55-57
11. Appendix II 58
12. Appendix III 59
13. EU Declaration of Conformity 59-60

deye.shop · support@deye.shop · 8 800 201-76-60

About This Manual

This manual provides information and guidelines for the installation, operation, and maintenance of the SUN-(60-80)K-SG02HP3-EU-EM6 inverter. Please note that it does not contain comprehensive information about the photovoltaic (PV) system.

How to Use This Manual

Before undertaking any operation involving the inverter, it is crucial to thoroughly read this manual and any associated documents. Ensure that these documents are stored safely and are readily accessible at all times.

Please be aware that the contents of this manual may undergo periodic updates or revisions as a result of ongoing product development. Consequently, the information contained herein is subject to change without prior notice. The latest manual can be acquired via service@deye.com.cn

1. Safety Introductions

Labels description

Label	Description
	Caution, risk of electric shock symbol indicates important safety instructions, which if not correctly followed, could result in electric shock.
	The DC input terminals of the inverter must not be grounded.
	Surface high temperature, Please do not touch the inverter case.
5min	The AC and DC circuits must be disconnected separately, and the maintenance personnel must wait for 5 minutes before they are completely powered off before they can start working.
	CE mark of conformity
	Please read the instructions carefully before use.
	Symbol for the marking of electrical and electronics devices according to Directive 2002/96/EC. Indicates that the device, accessories and the packaging must not be disposed as unsorted municipal waste and must be collected separately at the end of the usage. Please follow Local Ordinances or Regulations for disposal or contact an authorized representative of the manufacturer for information concerning the decommissioning of equipment.

deye.shop · support@deye.shop · 8 800 201-76-60

· This chapter contains important safety and operating instructions. Read and keep this manual for future reference.
· Before using the inverter, please read the instructions and warning signs of the battery and corresponding sections in the instruction manual.
· Do not disassemble the inverter. If you need maintenance or repair, take it to a professional service center.
· Improper reassembly may result in electric shock or fire.
· To reduce risk of electric shock, disconnect all wires before attempting any maintenance or cleaning. Turning off the unit will not reduce this risk.
· Caution: Only qualified personnel can install this device with battery.
· Never charge a frozen battery.
· For optimum operation of this inverter, please follow required specification to select appropriate cable size. It is very important to correctly operate this inverter.
· Be very cautious when working with metal tools on or around batteries. Dropping a tool may cause a spark or short circuit in batteries or other electrical parts, even cause an explosion.
· Please strictly follow installation procedure when you want to disconnect AC or DC terminals. Please refer to "Installation" section of this manual for the details.
· Grounding instructions - this inverter should be connected to a permanent grounded wiring system. Be sure to comply with local requirements and regulation to install this inverter.
· Never cause AC output and DC input short circuited. Do not connect to the mains when DC input short circuits.

2. Product Introductions

This is a multifunctional inverter, combining functions of inverter, solar charger and battery charger to offer uninterruptible power support with portable size. Its comprehensive LCD display offers user configurable and easy accessible button operation such as battery charging, AC/solar charging, and acceptable input voltage based on different applications.

deye.shop · support@deye.shop · 8 800 201-76-60

2.1 Product Overview

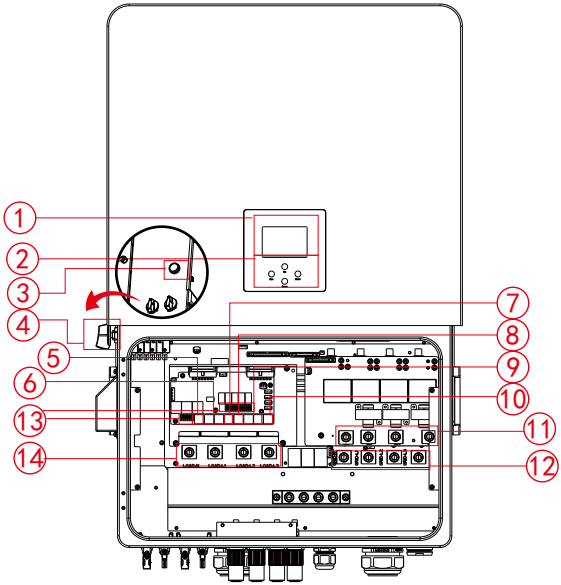

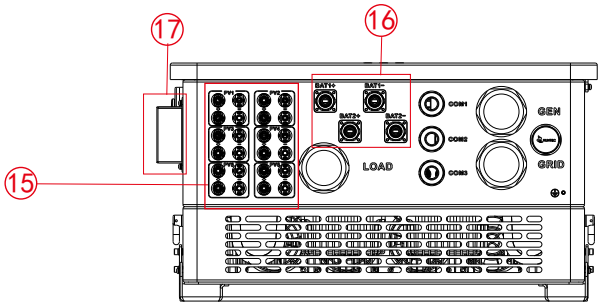

1: LCD display
2: Function buttons
3: Power on/off button
4: DC switch
5: Meter port
6: Parallel port
7: CAN port
8: DRM port
9: BMS port
10: RS485 port
11: Generator input
12: Grid
13: Function port
14: Load
15: PV input
16: Battery input
17: WiFi Interface

deye.shop · support@deye.shop · 8 800 201-76-60

2.2 Product Size

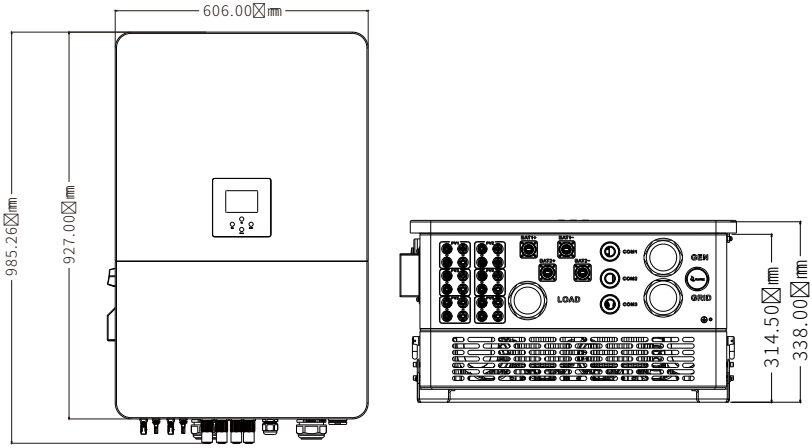

Inverter Size

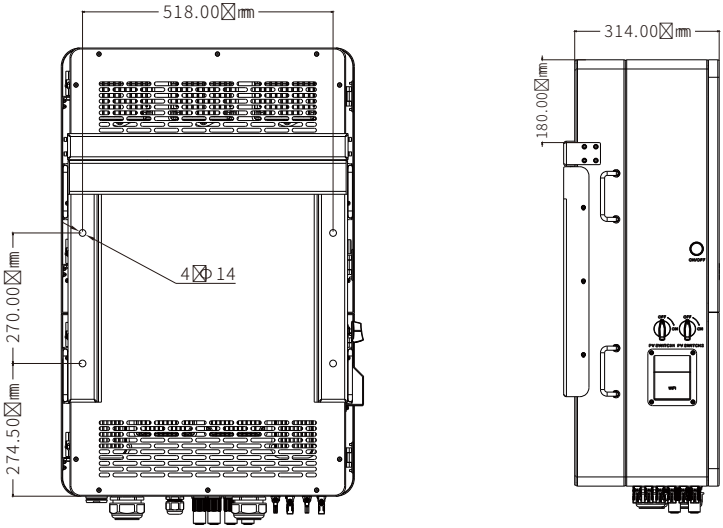

deye.shop · support@deye.shop · 8 800 201-76-60

2.3 Product Features

- 230V/400V Three phase Pure sine wave inverter.
- Self-consumption and feed-in to the grid.
- Auto restart while AC is recovering.
- Programmable supply priority for battery or grid.
- Programmable multiple operation modes: On grid, off grid and UPS.
- Configurable battery charging current/voltage based on applications by LCD setting.
- Configurable AC/Solar/Generator Charger priority by LCD setting.
- Compatible with mains voltage or generator power.
- Overload/over temperature/short circuit protection.
- Smart battery charger design for optimized battery performance
- With limit function, prevent excess power overflow to the grid.
- Supporting WIFI monitoring and have 3 or 4 built-in MPP Trackers, 1 MPP Tracker can connect 2 PV strings.
- Smart settable three stages MPPT charging for optimized battery performance.
- Time of use function.
- Smart Load Function.

2.4 Basic System Architecture

The following illustration shows basic application of this inverter.
It also includes following devices to have a complete running system.
- Generator（Fro off-grid mode）or Utility Grid
- PV modules

Consult with your system integrator for other possible system architectures depending on your requirements.
This inverter is designed to power a range of appliances commonly found in homes and offices, including motor type appliances like refrigerators and air conditioning units. Before use, it's advisable to verify appliance compatibility with this inverter.
The generator interface should not be connected to both the generator and the smart load simultaneously. The generator only can be connected in stand-alone scenario. When the grid be connected, the generator should not be connected simultaneously.

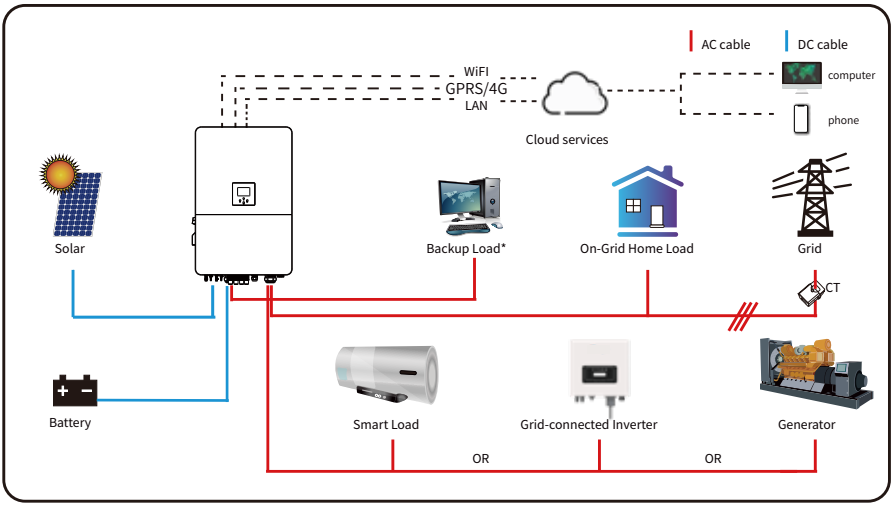

*Connected to the LOAD port

deye.shop · support@deye.shop · 8 800 201-76-60

2.5 Product handling requirements

Lift the inverter out of the packaging box and transport it to the designated installation location.

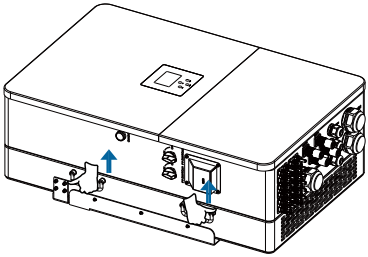

transport

CAUTION:

Improper handling may cause personal injury!

- Arrange an appropriate number of personnel to carry the inverter according to its weight, and installation personnel should wear protective equipment such as anti-impact shoes and gloves.
- Placing the inverter directly on a hard ground may cause damage to its metal enclosure. Protective materials such as sponge pad or foam cushion should be placed underneath the inverter.
- Move the inverter by one or two people or by using a proper transport tool.
- Move the inverter by holding the handles on it. Do not move the inverter by holding the terminals.

3. Installation

3.1 Parts List

Check the equipment before installation. Please make sure nothing is damaged in the package. You should have received the items in the following package:

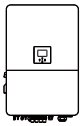

Hybrid inverter x1

Wall mounting bracket x1

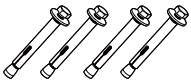

Stainless steel anti-collision bolt M12×60 x4

Communication cable x2

T-type wrench x1

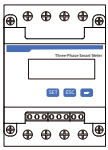

Meter(optional) x 1

User manual x1

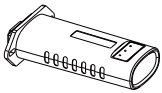

Data logger(optional) x1

deye.shop · support@deye.shop · 8 800 201-76-60

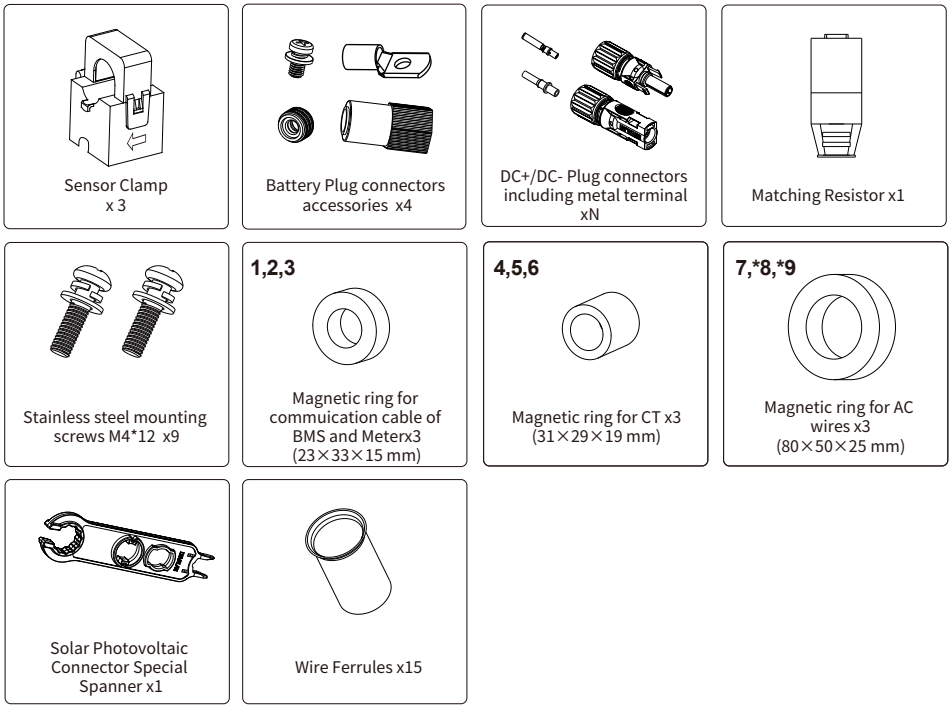

Packing box of magnetic ring

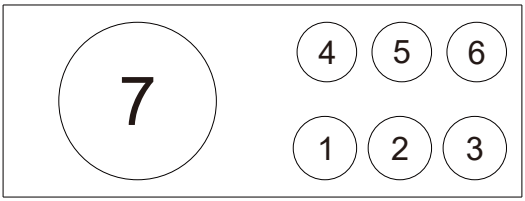

1,2,3 : 23×33×15 mm
4,5,6 : 31×29×19mm
7,8,9 :80×50×25 mm

*8 &*9 are placed on the top of the EPE material upper cover

3.2 Mounting instructions

Installation Precaution

This Hybrid inverter is designed for outdoor use(IP65), Please make sure the installation site meets below conditions:

- Not in direct sunlight, rain exposure, snow laying up during installation and operation.
- Not in areas where highly flammable materials are stored.
- Not in potential explosive areas.
- Not directly expose to the cold air to avoid condensation inside the inverter casing .
- Not near the television Antenna or antenna cable.
- Not higher than altitude of about 2000 meters above sea level.
- Not in environment of precipitation or humidity(>95%)

Excessive heat buildup, heavy rainfall or water pooling, can impact the performance and longevity of the inverter. Before connecting all wires, please take off the metal cover by removing screws as shown below:

deye.shop · support@deye.shop · 8 800 201-76-60

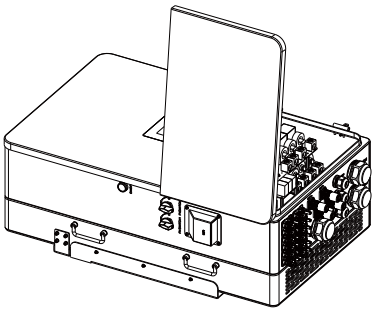

Installations Tools

Installation tools can refer to the following recommended ones. Also, use other auxiliary tools on site.

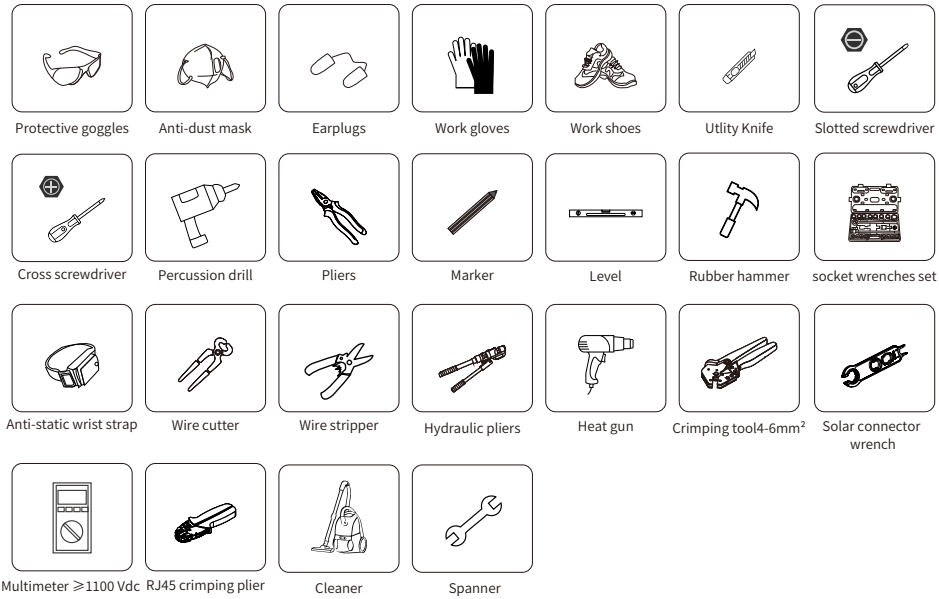

Considering the following points before selecting where to install:

· Please select a vertical wall with load-bearing capacity for installation, suitable for installation on concrete or other non-flammable surfaces, installation as follows.
· Install this inverter at eye level in order to allow the LCD display to be read at all times.
· The ambient temperature is recommeded to be between -40~60°C to ensure optimal operation.
· Be sure to keep enough distance between other objects and the inverter surfaces as shown in the diagram to guarantee sufficient heat dissipation and have enough space for removing wires.

deye.shop · support@deye.shop · 8 800 201-76-60

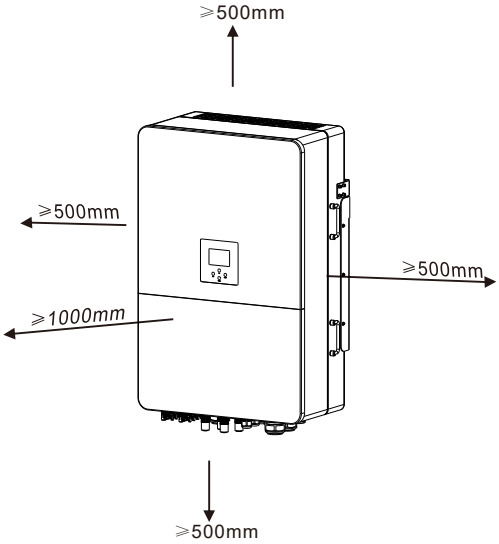

For a proper ventilation of the inverter and avoid overheating, allow a clearance of approximately 50 cm around the inverter and at least 100 cm to the front as it can be seen at the picture below.

Mounting the inverter

Remember that this inverter is heavy! Please be careful when lifting out from the package.
Choose the recommend drill head(as shown in below pic) to drill 4 holes on the wall, 62-70mm deep.
1. Use a proper hammer to fit the expansion bolt into the holes.
2. Screw out the nuts of the expansion bolts, align the holes of the mounting bracket with the 4 expansion bolts, and then push in the mounting bracket, tighten the nuts of expansion bolts.
3. Mount the inverter on the mounting bracket and use screws to fix the inverter with mounting bracket.

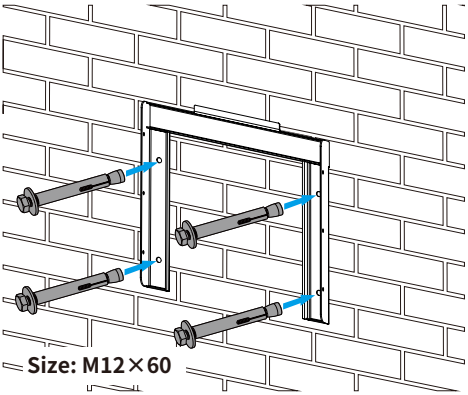

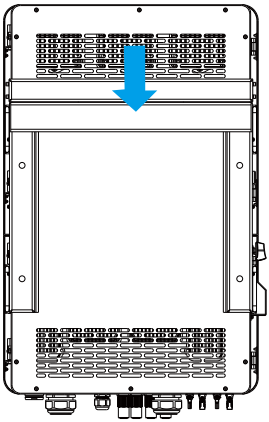

Inverter Mounting bracket installation

deye.shop · support@deye.shop · 8 800 201-76-60

3.3 Function port definition

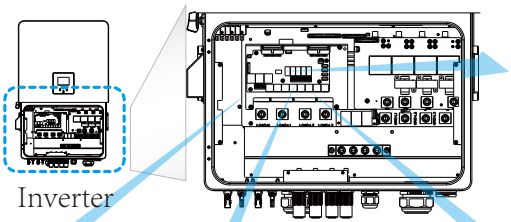

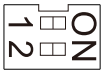

DIP switch：For communication setting of parallel system.

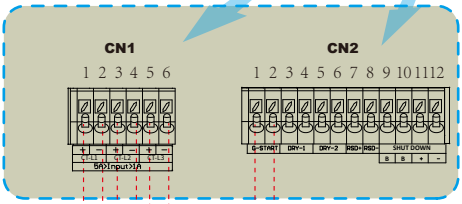

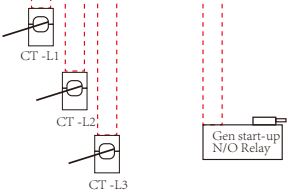

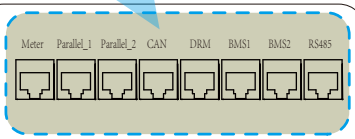

Meter: for energy meter communication.
Parallel_1: Parallel communication port 1.
Parallel_2: Parallel communication port 2 . (Parallel A and B are same and have no particular orders)
CAN: reserved.
DRM: Logic interface for AS/NZS 4777.2:2020.
BMS1: BMS port for battery communication port 1.
BMS2: BMS port for battery communication port 2.
RS485: RS485 port.

DRM: It is used to accept the external input signal(Digital input). More details please refer to the P57.

CN1:
CT-L1 (1,2): current transformer (CT-L1) for"zero export to CT"mode clamps on L1 when in three phase system.
CT-L2 (3,4): current transformer (CT-L2) for"zero export to CT"mode clamps on L2 when in three phase system.
CT-L3 (5,6): current transformer (CT-L3) for"zero export to CT"mode clamps on L3 when in three phase system.
If the secondary current of CT are within the range of 1A-5A, use terminals 1-6.
CN2:
G-start (1,2): dry contact signal for startup the diesel generator. When the "GEN signal" is active, the open contact (GS) will switch on (no voltage output).
DRY-1 (3,4): Dry contact output. When the inverter is in off-grid mode and the "signal island mode" is checked, the dry contact will switch on.
DRY-2 (5,6): reserved.
RSD+,RSD- (7,8): When battery is connected and the inverter is in "ON" status, it will provide 12Vdc.
SHUT DOWN (9,10,11,12): if the terminal "B" & "B" (9&10) is short-circuited with wire connection, or there’ s 12Vdc input at the terminal "+ "& "- " (11&12), the inverter will give alarm (F22) and shutdown immediately.

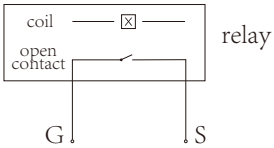

GS (diesel generator startup signal)

deye.shop · support@deye.shop · 8 800 201-76-60

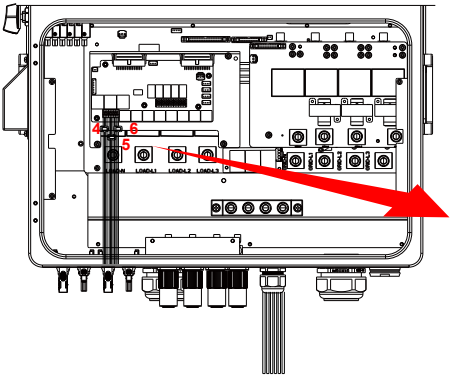

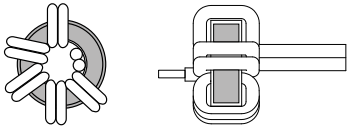

Thread the end of the CT's wires through the magnetic ring 4 and wrap the wires around it five lap. Fix the magnetic ring near the wiring terminals, as shown in the above diagram. Repeat this operation for the other two CTs.

deye.shop · support@deye.shop · 8 800 201-76-60

3.4 Battery connection

For safe operation and compliance, a separate DC over-current protector or disconnect device is required between the battery and the inverter. In certain applications, a disconnect switch may not be necessary, but it is always essential to have DC overcurrent protection in place. Refer to the typical amperage in the **page 28** for the required fuse or circuit breaker size.

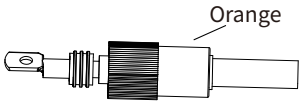

Pic 3.1 BAT+ plug connector

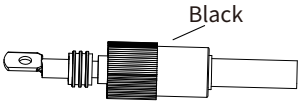

Pic 3.2 BAT- plug connector

Safety Hint:
Please use approved DC cable for battery system.

Model	Cross section（mm^2）	
	Range	Recommended value
60/70/75/80kW	4AWG	$16mm^2$

Chart 3-2

The steps to assemble the battery plug connectors are listed as follows:
a) Pass the cable through the terminal, as shown in Pic 3.3.

Pic 3.3

deye.shop · support@deye.shop · 8 800 201-76-60

b) Put on the rubber ring, as shown in Pic 3.4.

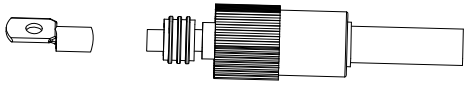

Pic 3.4

c) Crimp the metal terminal, as shown in Pic 3.5.

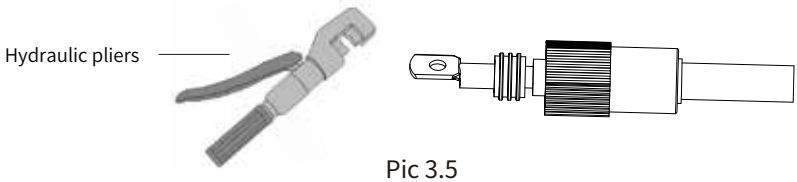

Pic 3.5

d) Fasten terminal with a bolt, as shown in Pic 3.6.

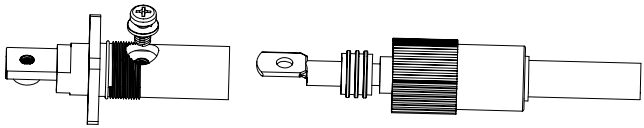

Pic 3.6

e) Fasten the terminal with outer cover, as shown in Pic 3.7.

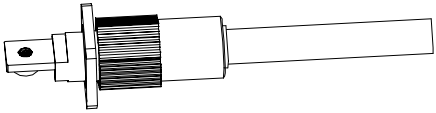

Pic 3.7

BMS connection

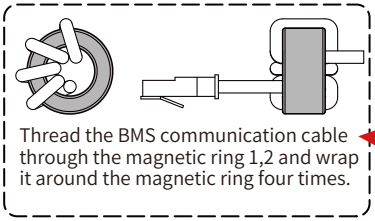

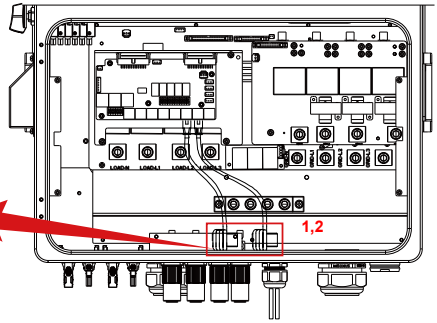

deye.shop · support@deye.shop · 8 800 201-76-60

3.5 Grid connection and backup load connection

· Before connecting to the grid, a separate AC breaker must be installed between the inverter and the grid, and also between the backup load and the inverter.This will ensure the inverter can be securely disconnected during maintenance and fully protected from over current.Check the recommended values in the following tables according to local regulations in each country. The recommended specifications for AC breakers here are based on the Max.Continuous AC passthrough current of inverter, you can also choose the AC breaker of backup side according to the actual total operating current of all the backup loads.

· There are three terminal blocks with "Grid" "Load"and "GEN" markings. Please do not misconnect input and output connectors.

AC Breaker for backup load

Model	Recommended AC breaker
60/70/75/80kW	250A

AC Breaker for grid

Model	Recommended AC breaker
60/70/75/80kW	250A

Note:
In final installation,breaker certified according to IEC 60947-1 and IEC 60947-2 shall be installed with the equipment.
All wiring must be performed by a qualified personnel.It is very important for system safety and efficient operation to use appropriate cable for AC input connection. To reduce risk of injury, please use the proper recommended cable as below. There are two tables below, the first table recommends cable specifications based on bypass current(Max.Continuous AC passthrough), and the second table is based on Max.AC output current.

Grid connection and backup load connection (Copper wires) (bypass)

Model	Wire Size	Cross section(mm^2)	Torque value(max)
60/70/75/80kW	4/0AWG	95	20.3Nm

Grid connection and backup load connection (Copper wires)

Model	Wire Size	Cross section(mm^2)	Torque value(max)
60/70/75/80kW	4/0AWG	95	20.3Nm

Chart 3-3 Recommended Size for AC wires

Please follow below steps to implement Grid, load and Gen port connection:

1. Before making Grid, load and Gen port connection, be sure to turn off AC breaker or disconnector first.
2. Strip the insulation of AC wires by about 10mm, insert AC wires according to polarities indicated on the terminal block and tighten the terminals. Be sure to connect corresponding N wires and PE wires to related terminals as well.

deye.shop · support@deye.shop · 8 800 201-76-60

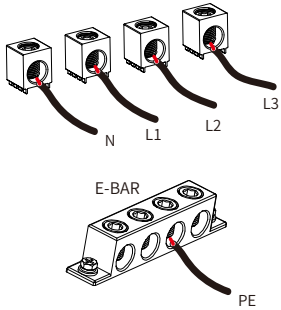

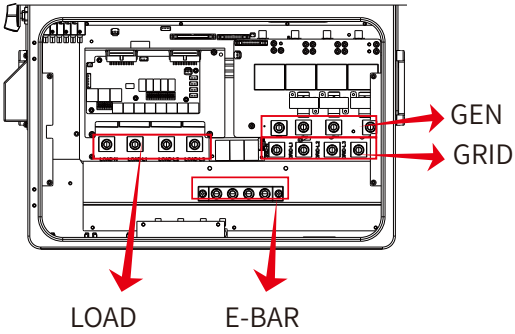

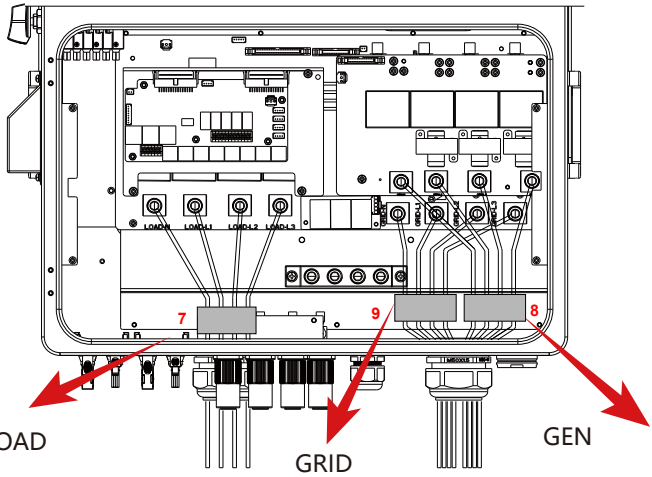

7

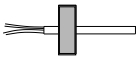

Thread the end of wires through the magnetic ring 7 and connect these wires to the terminals of LOAD port corresponding to the indication of polarity.

9

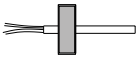

Thread the end of wires through the magnetic ring 9 and connect these wires to the terminals of GRID port corresponding to the indication of polarity.

8

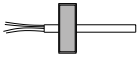

Thread the end of wires through the magnetic ring 8 and connect these wires to the terminals of GEN port corresponding to the indication of polarity.

deye.shop · support@deye.shop · 8 800 201-76-60

Be sure that AC power source is disconnected before attempting to wire it to the unit.

3. Make sure all the wires are securely and completely connected.
4. Some appliances, such as air conditioners and refrigerators, may need a time delay before recconneting them after a power outage. This delay allows the refrigerant gas to stabilize and prevents potential damage. Check if your appliance has a built-in time-delay function before connecting it to our inverter. Examples of appliances that may require a delay include:
Air conditioners: Balancing refrigerant gas.
Refrigerators: Stabilizing the compressor.
Freezers: Allowing the cooling system to balance.
Heat pumps: Protecting against power fluctuations.
This inverter will protect your appliances by triggering an overload fault if no time delay is present. However, internal damage may still occur. Refer to the manufacturer's documentation for specific time-delay requirements.

3.6 PV Connection

Before connecting to PV modules, please install a separately DC circuit breaker between inverter and PV modules. It is very important for system safety and efficient operation to use appropriate cable for PV module connection.

To avoid any malfunction, do not connect any PV modules with possible leakage current to the inverter. For example, grounded PV modules will cause leakage current to the inverter. When using PV modules, please ensure the PV+ & PV- of solar panel is not connected to the system ground bar.

It is requested to use PV junction box with surge protection. Otherwise, it will cause damage on inverter when lightning occurs on PV modules.

deye.shop · support@deye.shop · 8 800 201-76-60

3.6.1 PV Module Selection:

When selecting proper PV modules, please be sure to consider below parameters:
1) Open circuit Voltage (Voc) of PV modules can not exceed max.PV Input Voltage of inverter.
2) Open circuit Voltage (Voc) of PV modules should be higher than min.PV Input Voltage of inverter.
3) The PV modules used to connected to this inverter shall be Class A rating certified according to IEC 61730.

Inverter Model	60kW	70kW	75kW	80kW
PV Input Voltage	650V (180V-1000V)			
PV Array MPPT Voltage Range	150V-850V			
No. of MPP Trackers	6			
No. of Strings MPP Tracker	2+2+2+2+2+2			

Chart 3-5

3.6.2 PV Module Wire Connection:

1. Switch the Grid Supply Main Switch(AC)OFF.
2. Switch the DC Isolator OFF.
3. Assemble PV input connectors to the inverter.

Safety Hint:
Before connection, please make sure the polarity of PV array matches the "DC+" and "DC-" symbols.

Safety Hint:
Before connecting to inverter, please make sure that the open circuit voltage of PV strings haven't exceeded the max.PV input voltage of the inverter.

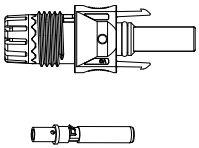

Pic 5.1 DC+ male connector

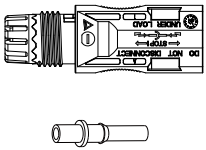

Pic 5.2 DC- female connector

deye.shop · support@deye.shop · 8 800 201-76-60

Safety Hint:
Please use approved DC cable for PV system.

Cable type	Cross section（mm^2）	
	Range	Recommended value
Industry generic PV cable (model: PV1-F)	2.5-4 (12-10AWG)	2.5(12AWG)

Chart 3-6

The steps to assemble the PV connectors are listed as follows:
a) Strip the insulation of the PV wire by 7 mm, disassemble the cap nut of the connetctor, thread one PV wire through the cap nut of the connector (see Pic 5.3). Repeat this operation with all the PV wires, paying special attention to the polarity of the connector.

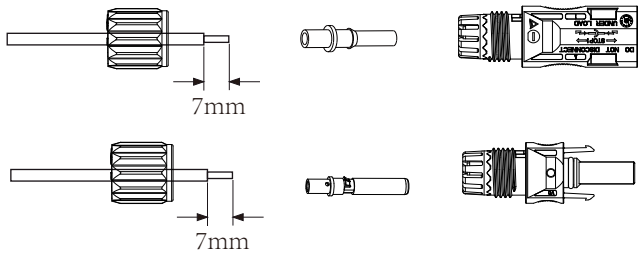

Pic 5.3 Disassemble the connector cap nut

b) Crimping metal terminals with crimping pliers , as shown in Pic 5.4.

Pic 5.4 Crimp the contact pin to the wire

c) Insert the contact pin to the top part of the connector and completely tighten the cap nut to the top part of the connector, as shown in Pic 5.5.

deye.shop · support@deye.shop · 8 800 201-76-60

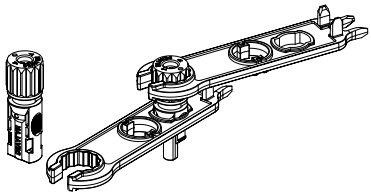

Pic 5.5 connector with cap nut screwed on

d) Finally insert the PV connectors into the positive and negative PV inputs of the inverter, as shown in Pic 5.6.

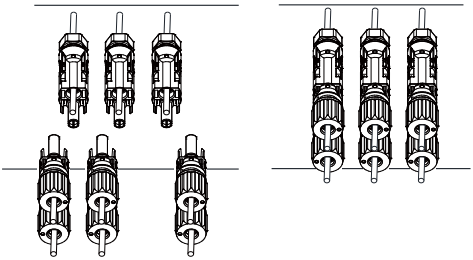

Pic 5.6 DC input connection

Warning:

When operating the PV strings, be aware that sunlight exposure can generate high voltages in the PV strings. Avoid contact with exposed electrical connecters or terminals to prevent electrical shock or injury. For safety, it is best to operate the PV strings at night or when PV modules are not exposed to sunlight. If daytime operation is necessary, cover the PV modules to minimize sunlight exposure and prevent high voltage generation. Remember to turn off the DC breaker or switch before performing any maintenance or adjustments. Do not turn off the DC breaker or switch when high voltage or high current is present to avoid damage or hazards. Prioritize personal safety.

Warning:

Please use its own DC power connector from the inverter accessories. Do not interconnect the connectors of different manufacturers. The Isc current of PV modules should not exceed the Max.PV Isc current of this inverter. If exceeds, it may damage the inverter and is not covered by Deye's warranty.

deye.shop · support@deye.shop · 8 800 201-76-60

3.7 Meter or CT installation

There are three selectable installation methods to measure the power consumption or to ensure zero power export to grid. The default installation method is to use the CTs（300A/5A） that come with the packaging box. When the distance between the AC distribution box and the hybrid inverter exceeds 10 meters, which means that the wire length of the CT needs to exceed 10 meters, it is recommended to use a smart meter instead of three CTs. In addition, in a parallel system, if the current to be measured is greater than 300 A, the default three CTs also need to be replaced with smart meters or larger CTs. Please contact the Deye support team to confirm which specification of CT or smart meter to use.

3.7.1 CT connection

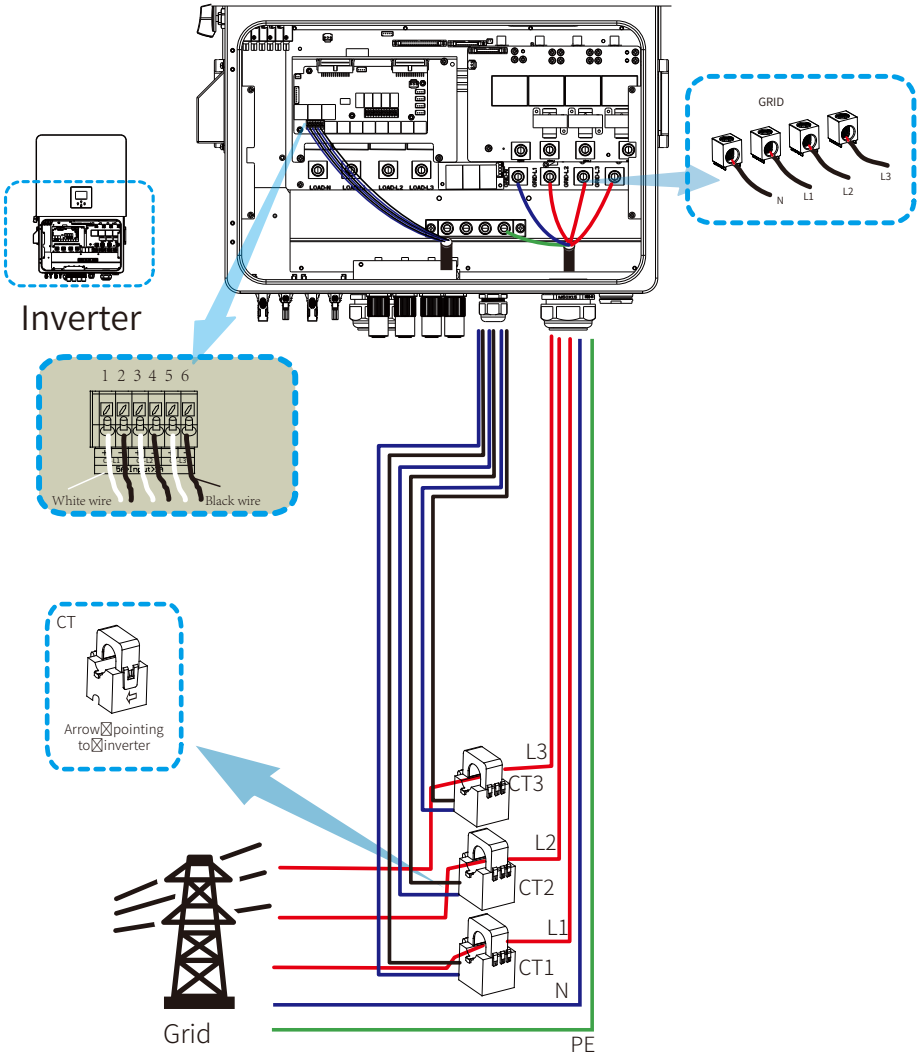

deye.shop · support@deye.shop · 8 800 201-76-60

***Note：When taking power from the utility grid, if the grid power displayed on the LCD screen is indeed negative, please adjust the installation direction of the CTs.Please refer to Chapter 3.10 for the position to be clamped.**

3.7.2 Meter connection with CTs

Due to Max. Continuous AC Passthrough (grid to load) is 200A，so only transformer meter which can measure higher current is recommended to be installed.The smart meter brands that Deye inverters have been matched withinclude CHINT and Eastron, The recommended models here are not all compatible models, It is recommended to purchase smart meter from authorized distributors of Deye, otherwise it may not be able to be used due to communication mismatch. The definition of the "Meter" port can be found in the Appendix part which is in the end of this user manual.

deye.shop · support@deye.shop · 8 800 201-76-60

Inverter

GRID

N L1 L2 L3

Meter Parallel_1 Parallel_2

AC Breaker

RS485A RS485B

PE
N
L1
L2
L3

AC Breaker

Home Load

PE
N
L1
L2
L3

Grid

CT1 CT2 CT3

Blue line
White line
Blue line
White line
Blue line
White line

Note: the arrow direction towards the inverter

230/400V,3~
250A/50mA
50/60Hz

CHNT DTSU666

3 6 9 10 13 14 16 17 19 21

Grid (3,6,9,10)

L1
L2
L3
N

RS 485

24 25

A B

CHINT meter

Phase A current =5.000A

Phase B current =5.001A

Phase C current =5.002A

PIN 13,16,19: White cable of the CT

PIN 14,17,21: Blue cable of the CT

deye.shop · support@deye.shop · 8 800 201-76-60

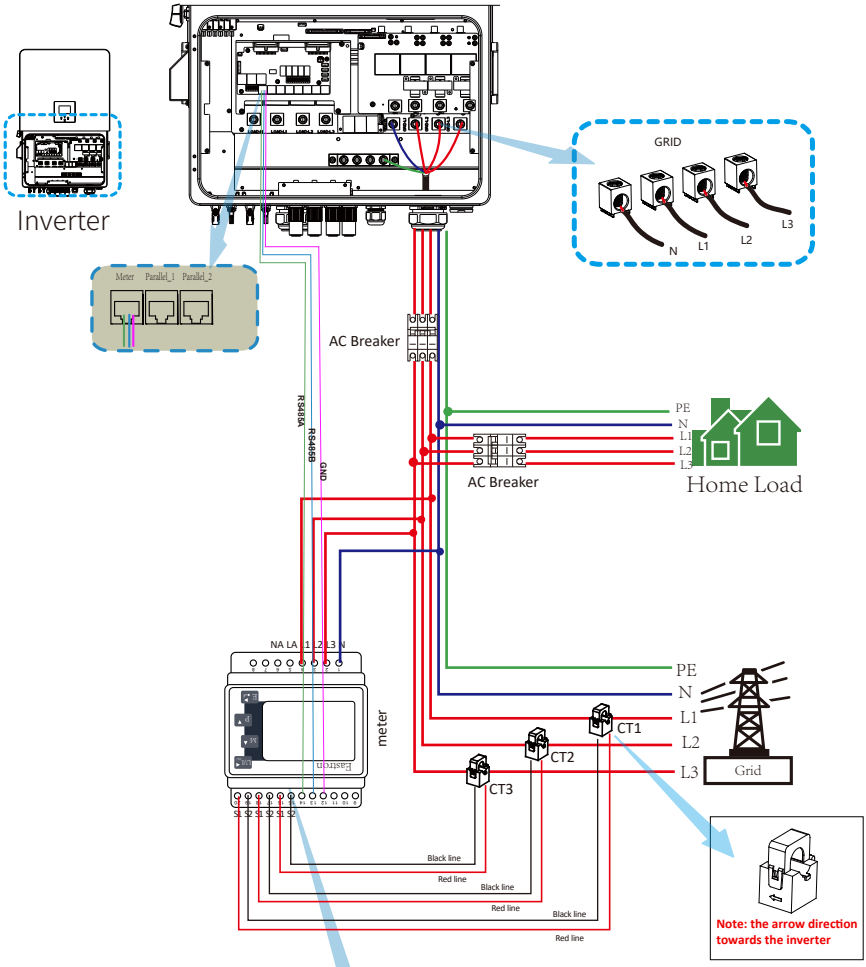

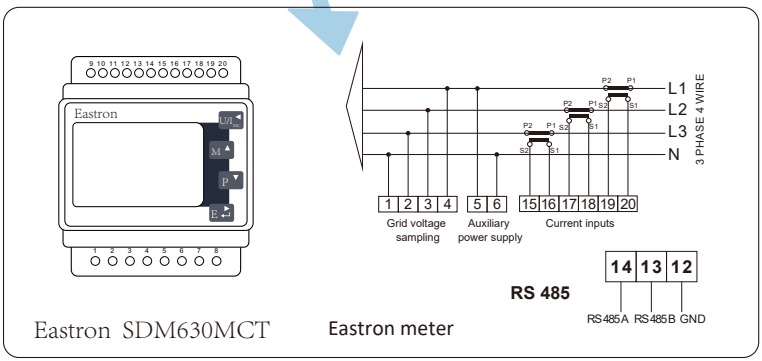

deye.shop · support@deye.shop · 8 800 201-76-60

Meter connection

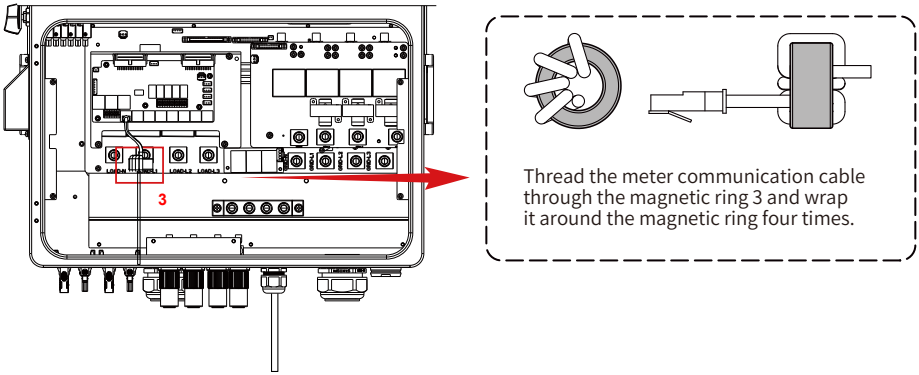

deye.shop · support@deye.shop · 8 800 201-76-60

3.8 Earth Connection(mandatory)

Ground cable shall be connected to ground plate on grid side, this prevents electric shock if the original protective conductor fails.

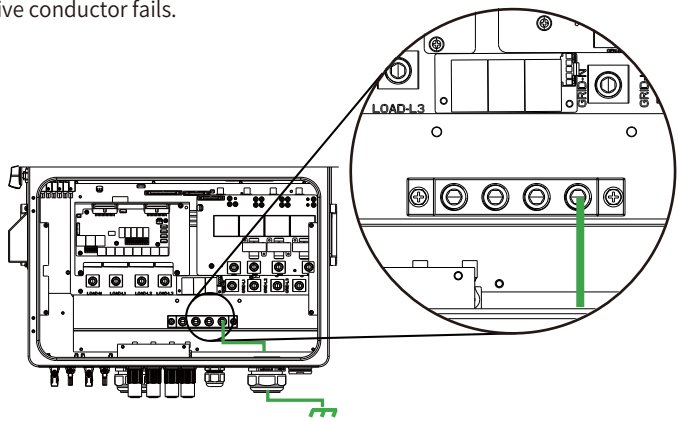

Earth Connection (Copper wires) (bypass)

Model	Wire Size	Cross section(mm²)	Torque value(max)
60/70/75/80kW	0AWG	50	20.3Nm

Earth Connection (Copper wires)

Model	*Wire Size*	Cross section(mm²)	Torque value(max)
60/70/75/80kW	0AWG	50	20.3Nm

The conductor should be made of the same metal as the phase conductors.

Warning:
Inverter has built-in leakage current detection circuit,The type A RCD can be connected to the inverter for protection according to the local laws and regulations.If an external leakage current protection device is connected to the grid port of inverter, please refer to section 3.11, its operating current must be equal to 10mA/KVA or higher, for this series of inverter it should be 800mA or higher, otherwise inverter may not work properly.

3.9 Data logger connection

For the configuration of data logger, please refer to the user manual of data logger. Wi-Fi logger is not the only option, If the installation location does not have Wi-Fi signal or the signal is weak, you can also choose a data logger that communicates via other interfaces.

deye.shop · support@deye.shop · 8 800 201-76-60

3.10 Wiring diagram with neutral line grounded

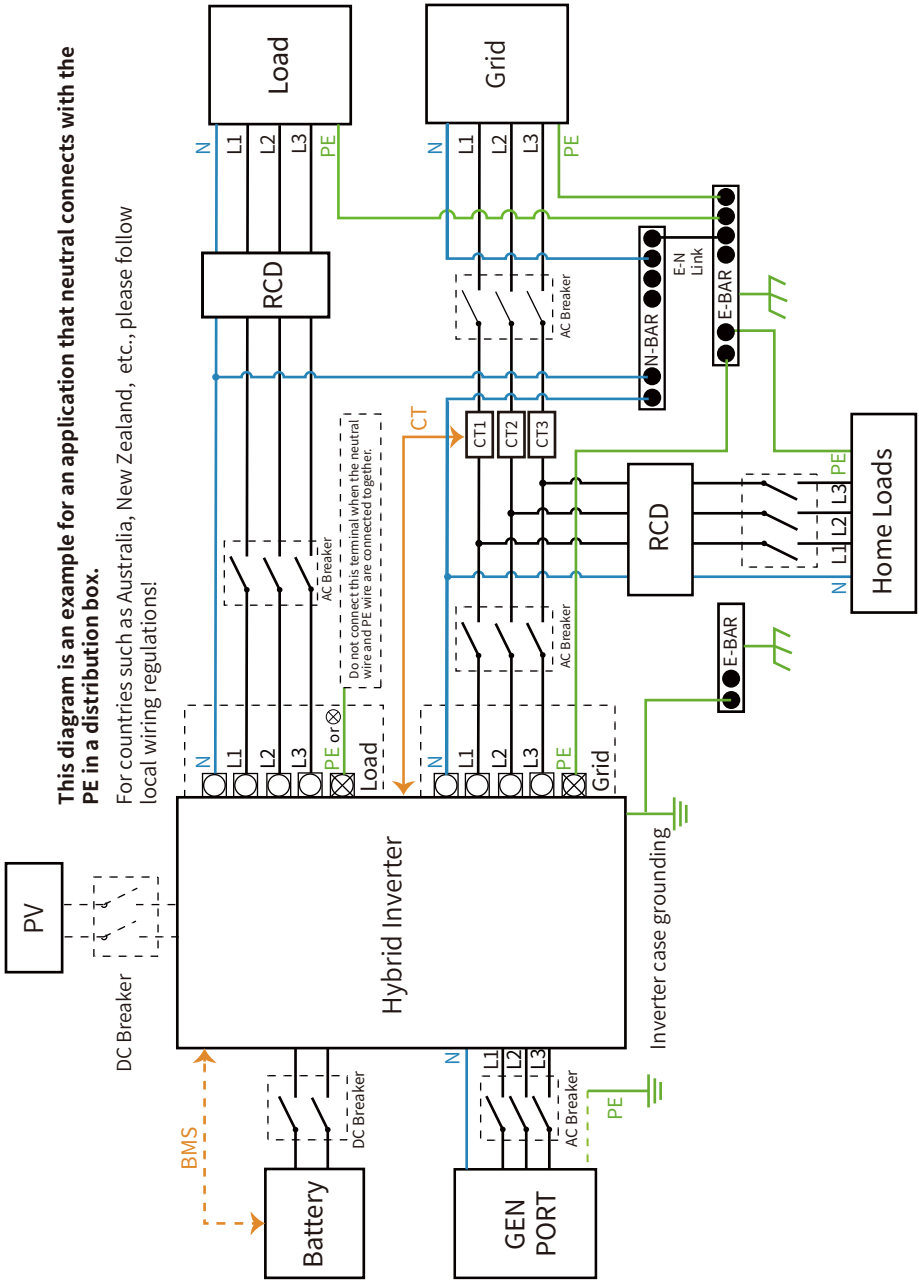

deye.shop · support@deye.shop · 8 800 201-76-60

3.11 Wiring diagram with neutral line ungrounded

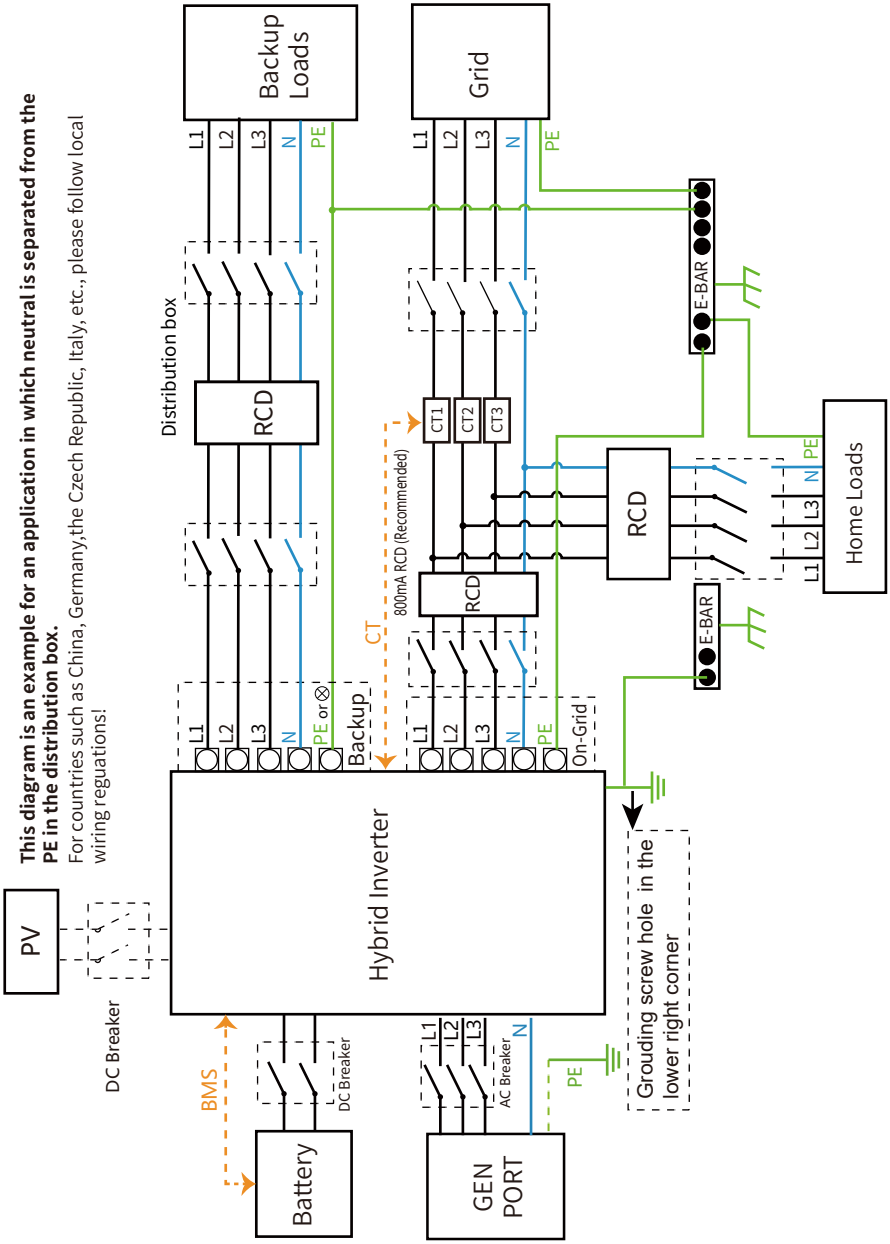

deye.shop · support@deye.shop · 8 800 201-76-60

3.12 Typical application diagram of on-grid system

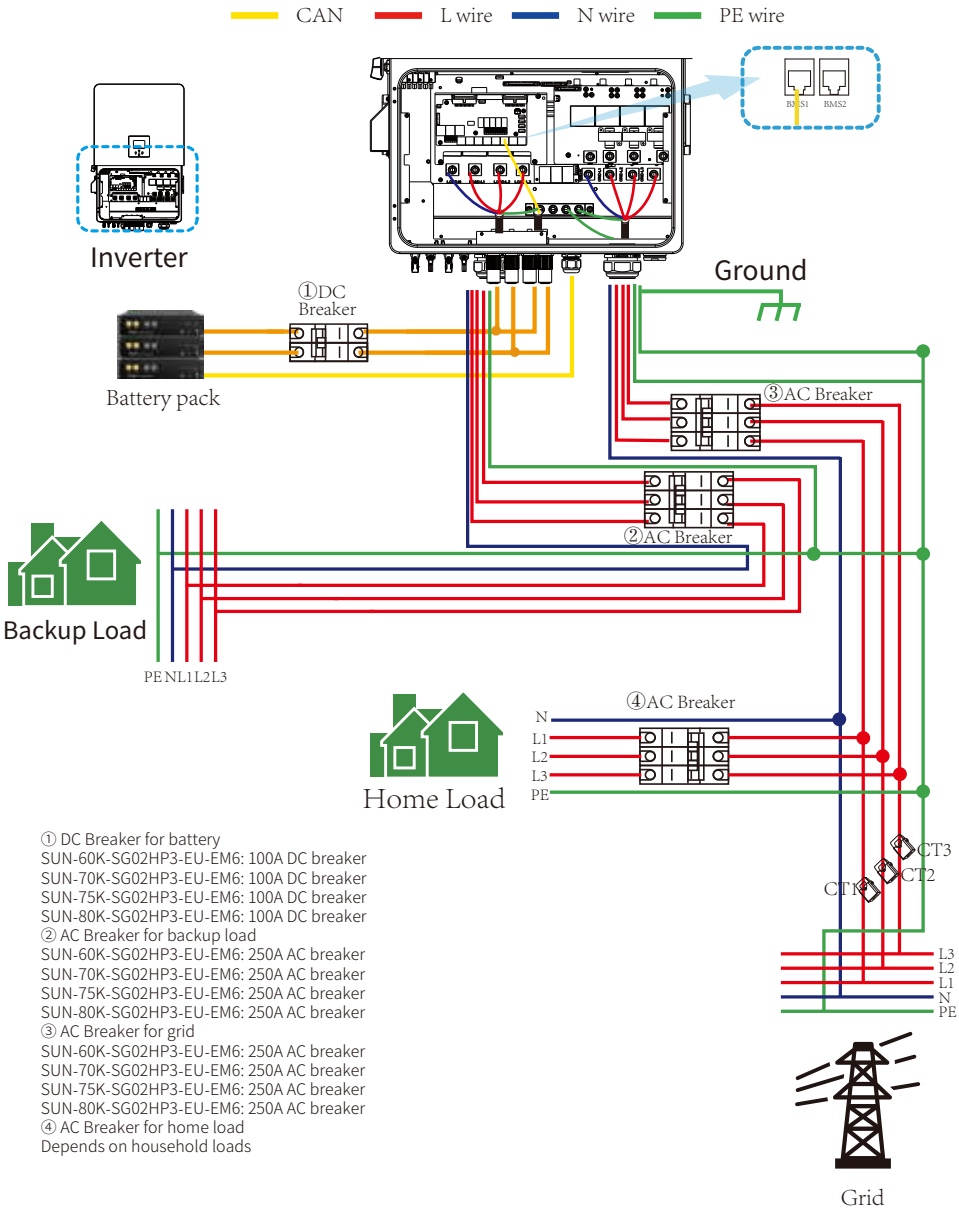

① DC Breaker for battery
SUN-60K-SG02HP3-EU-EM6: 100A DC breaker
SUN-70K-SG02HP3-EU-EM6: 100A DC breaker
SUN-75K-SG02HP3-EU-EM6: 100A DC breaker
SUN-80K-SG02HP3-EU-EM6: 100A DC breaker
② AC Breaker for backup load
SUN-60K-SG02HP3-EU-EM6: 250A AC breaker
SUN-70K-SG02HP3-EU-EM6: 250A AC breaker
SUN-75K-SG02HP3-EU-EM6: 250A AC breaker
SUN-80K-SG02HP3-EU-EM6: 250A AC breaker
③ AC Breaker for grid
SUN-60K-SG02HP3-EU-EM6: 250A AC breaker
SUN-70K-SG02HP3-EU-EM6: 250A AC breaker
SUN-75K-SG02HP3-EU-EM6: 250A AC breaker
SUN-80K-SG02HP3-EU-EM6: 250A AC breaker
④ AC Breaker for home load
Depends on household loads

deye.shop · support@deye.shop · 8 800 201-76-60

3.13 Typical application diagram of diesel generator

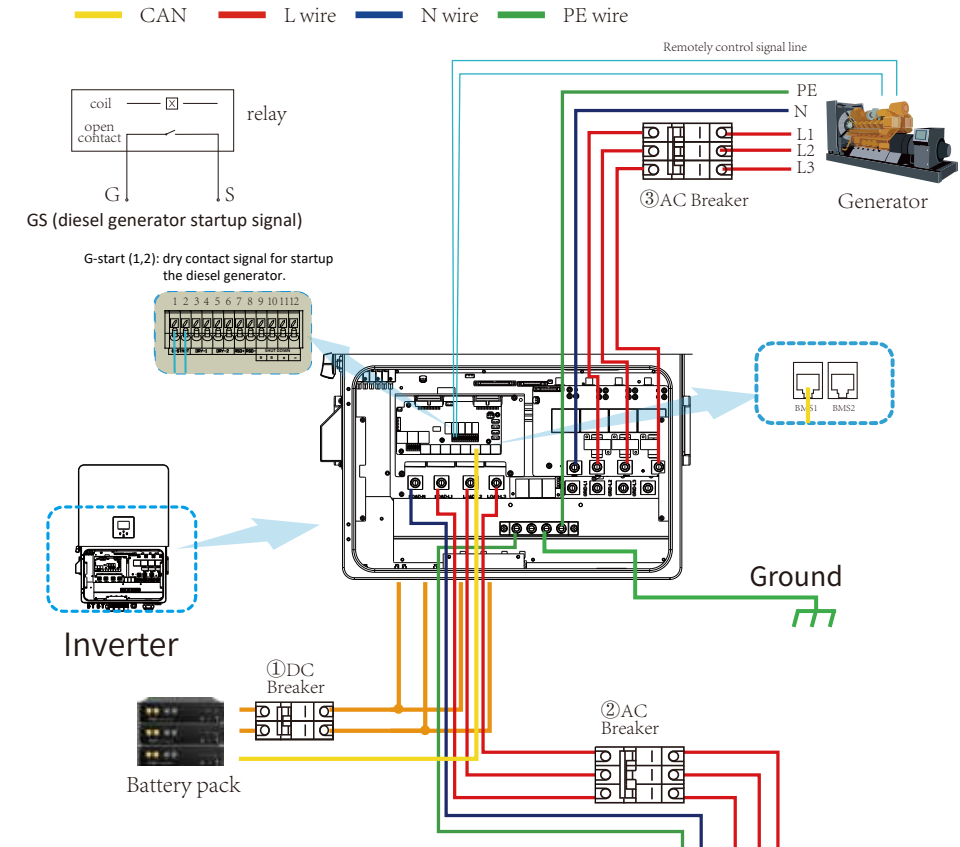

① DC Breaker for battery
SUN-60K-SG02HP3-EU-EM6: 100A DC breaker
SUN-70K-SG02HP3-EU-EM6: 100A DC breaker
SUN-75K-SG02HP3-EU-EM6: 100A DC breaker
SUN-80K-SG02HP3-EU-EM6: 100A DC breaker
② AC Breaker for backup load
SUN-60K-SG02HP3-EU-EM6: 250A AC breaker
SUN-70K-SG02HP3-EU-EM6: 250A AC breaker
SUN-75K-SG02HP3-EU-EM6: 250A AC breaker
SUN-80K-SG02HP3-EU-EM6: 250A AC breaker
③ AC Breaker for Generator port
SUN-60K-SG02HP3-EU-EM6: 250A AC breaker
SUN-70K-SG02HP3-EU-EM6: 250A AC breaker
SUN-75K-SG02HP3-EU-EM6: 250A AC breaker
SUN-80K-SG02HP3-EU-EM6: 250A AC breaker

deye.shop · support@deye.shop · 8 800 201-76-60

3.14 Three phase parallel connection diagram

Note: For the parallel system, the lead-acid battery and 'No Batt' mode are not supported.
All inverters connected in parallel must be the same model. Please use lithium battery which is on the "Deye Approved Battery list".
Each inverter should have its own separate battery set.

Note: For the parallel system, please choose the "Zero export to CT " mode. Only the master inverter needs to be installed CT.

CAN — L wire — N wire — PE wire

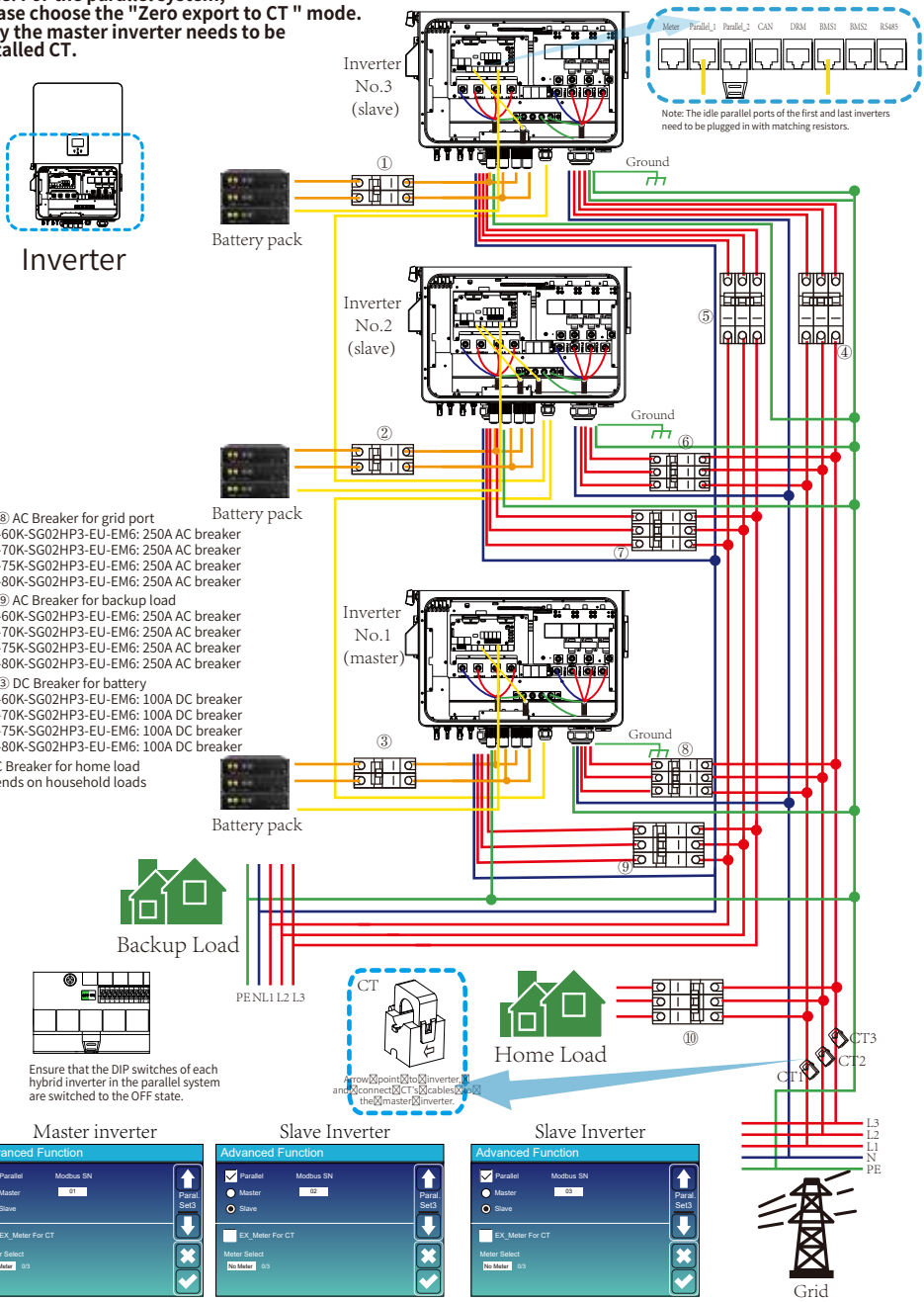

④⑥⑧ AC Breaker for grid port
SUN-60K-SG02HP3-EU-EM6: 250A AC breaker
SUN-70K-SG02HP3-EU-EM6: 250A AC breaker
SUN-75K-SG02HP3-EU-EM6: 250A AC breaker
SUN-80K-SG02HP3-EU-EM6: 250A AC breaker

⑤⑦⑨ AC Breaker for backup load
SUN-60K-SG02HP3-EU-EM6: 250A AC breaker
SUN-70K-SG02HP3-EU-EM6: 250A AC breaker
SUN-75K-SG02HP3-EU-EM6: 250A AC breaker
SUN-80K-SG02HP3-EU-EM6: 250A AC breaker

①②③ DC Breaker for battery
SUN-60K-SG02HP3-EU-EM6: 100A DC breaker
SUN-70K-SG02HP3-EU-EM6: 100A DC breaker
SUN-75K-SG02HP3-EU-EM6: 100A DC breaker
SUN-80K-SG02HP3-EU-EM6: 100A DC breaker

⑩ AC Breaker for home load
Depends on household loads

deye.shop · support@deye.shop · 8 800 201-76-60

4. OPERATION

4.1 Power ON/OFF

Once the system has been properly installed and the battery is connected to the inverter, follow the steps below to turn on the inverter:
1. Turn all the breakers of the installation on.
2. Turn on the DC switches of the inverter and the power button of battery (If there is one battery installed at the system), no matter the order.
3. Press the ON/OFF button (located on the left side of the inverter case) to turn on the inverter.
When a system connected to either PV or Grid (without battery) is switched on, the LCD will still be lighted up displaying "OFF". In this situation, after switching ON/OFF button on, select "NO batt" at the inverter settings to make the system work.
When turning off the inverter, please follow the following steps:
1. Turn off the AC breakers on Grid port, Load port and GEN port.
2. Press the ON/OFF button of hybrid inverter and turn off the DC breaker on battery side, then turn off the power button of the battery.
3. Switch off the DC switches of the inverter.

4.2 Operation and Display Panel

The operation and display panel, shown in below chart, is on the front panel of the inverter.
It includes four indicators, four function keys and a LCD display, indicating the operating status and input/output power information.

LED Indicator		Messages
DC	Green led solid light	PV Connection normal
AC	Green led solid light	Grid Connection normal
Normal	Green led solid light	Inverter operating normal
Alarm	Red led solid light	Malfunction or warning

Chart 4-1 LED indicators

Function Key	Description
Esc	To exit setting mode
Up	To go to previous selection
Down	To go to next selection
Enter	To confirm the selection

Chart 4-2 Function Buttons

deye.shop · support@deye.shop · 8 800 201-76-60

5. LCD Display Icons

5.1 Main Screen

The LCD is touchscreen, below screen shows the overall information of the inverter.

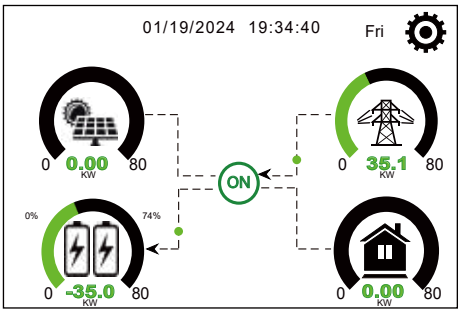

1.The icon at the center of the screen indicates whether the system is under normal operation or not, displaying "ON" for normal status or displaying a code like "Comm./F01-F64" for communication errors or other errors. Please refer to the Error code list of alarms and errors in chapter 8 to find out solutions about the error.

2.At the top-center of the screen is the date and local time that must be set during commissioning.

3.System Setup Icon, Press this set button,you can enter into the system setup screen which including Basic Setting, Battery Setting , Grid Setting, System Work Mode, Generator Port Use, Advanced Function and Device info.

4.The main screen includes the icons for PV(left up), grid (right up), load (right bottom) and battery (left bottom). It also displays the energy flow direction by moving dots. When the power is approaching to a high level, the color on the panels will change from green to red, showing vividly the system status on the main screen.

Some clarifications about the system status are as follows:
-PV power will always be positive.
-In single inverter system, load power will always be positive. In a parallel system, the load power may be negative, which means that the other inverters supply power to this inverter through the load port.
-A negative Grid power means energy being exported to the grid (sold), whereas positive means energy being imported form the grid (purchased).
-Negative battery power means charging, positive means discharging.

deye.shop · support@deye.shop · 8 800 201-76-60

5.1.1 LCD operation flow chart

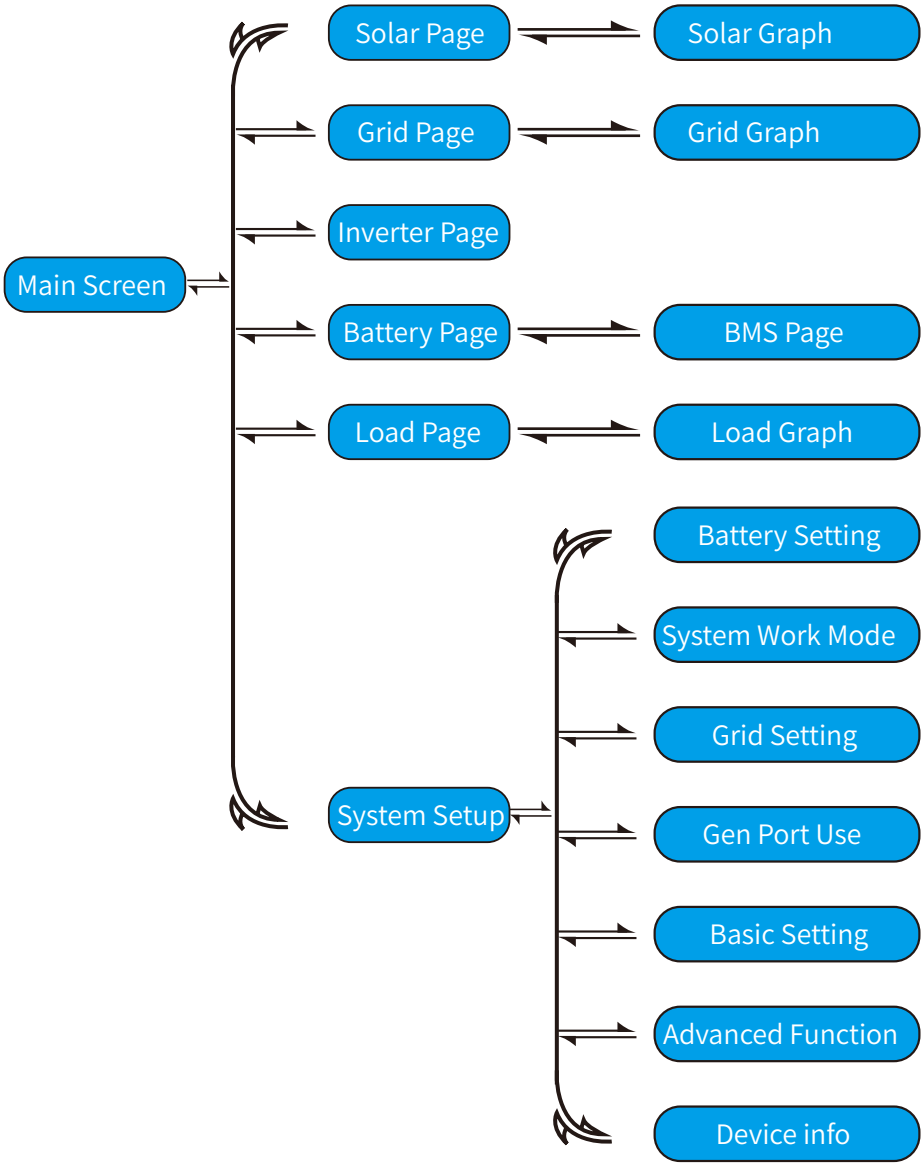

deye.shop · support@deye.shop · 8 800 201-76-60

5.2 Detail page

Click the icons on main screen of LCD display, you can enter the detail pages of "Solar", "Inverter","Load","Grid" and "Batt".

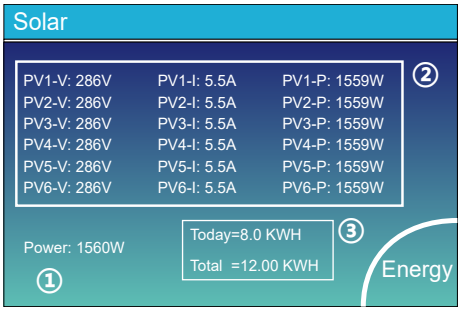

This is Solar Panel detail page.

① Solar Panel Generation.

② Voltage, Current, Power for each MPPT.

③ Daily and total PV production.

Press the "Energy "button will enter into the power curve page.

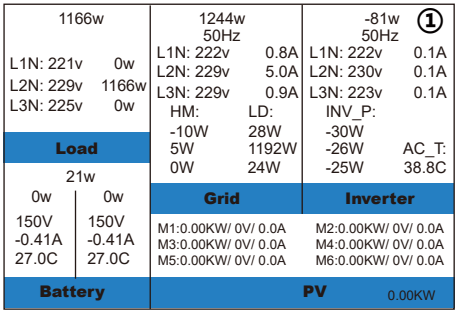

This is Inverter detail page.

① DC/AC Inverter module:
Voltage, Current, Power of each Phase.
AC-T: Temperature near DC/AC inverter module.

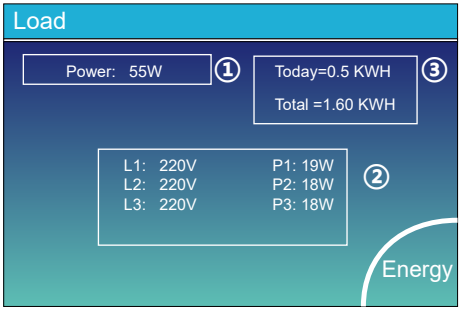

This is Load detail page.

① Load Power.

② Voltage, Power for each Phase.

③ Daily and total Load consumption .

When you check "Selling First" or "Zero export to Load" on system work mode page, the information on this page is about backup load which connect on Load port of hybrid inverter.
When you check "Zero export to CT"on system work mode page, the information on this page is including backup load and home load.

Press the "Energy " button will enter into the power curve page.

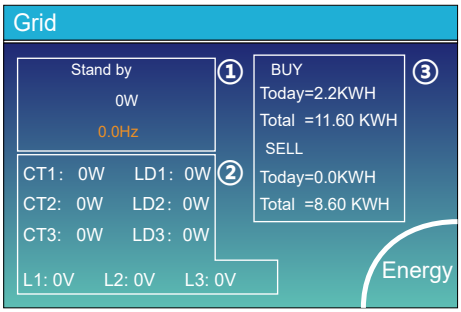

This is Grid detail page.

① Status, Power, Frequency.

② L: Voltage for each Phase
CT: Power detected by the external current sensors or smart meter.
LD: Power detected using internal sensors on AC grid in/out port.

③ BUY: Energy from Grid to Inverter,
SELL: Energy from Inverter to grid.

Press the "Energy " button will enter into the power curve page.

deye.shop · support@deye.shop · 8 800 201-76-60

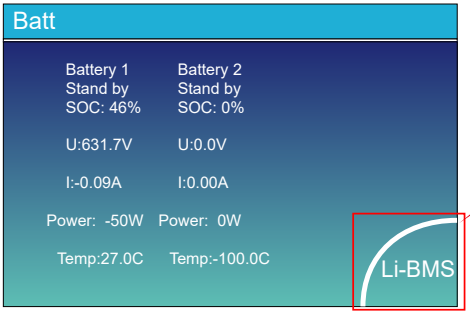

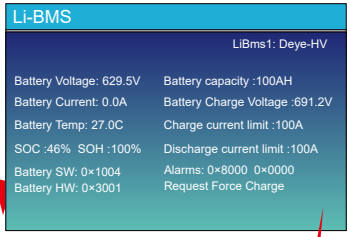

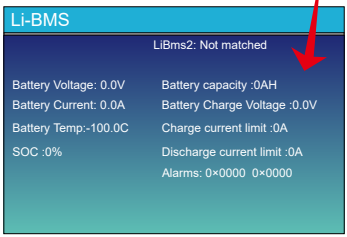

This is Battery detail page.

BATTERY DETAIL PAGE

Click the "Li-BMS" button on the lower right corner of Battery detail page, you can enter the BMS page.

Press the "Down" button, you can enter the LiBms2 detail page

5.3 Curve Page-Solar & Load & Grid

In the main screen of LCD display, click the icons of "Solar", "Grid" and "Load", you can enter the detail pages of Solar power, Grid power and Load consumption. Click the "Energy" button on the lower right corner of these detail pages, you can enter the curve page. Using PV as an example for illustration below.

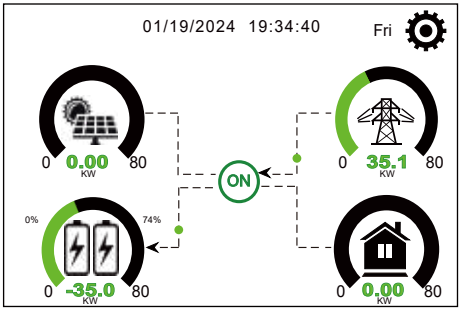

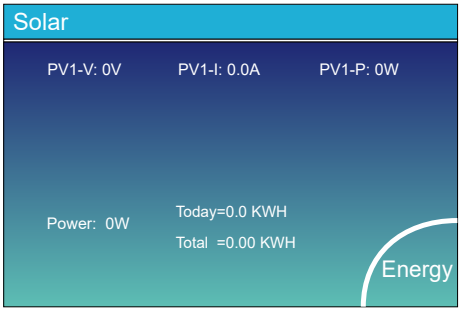

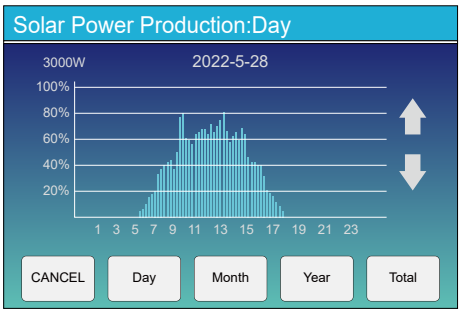

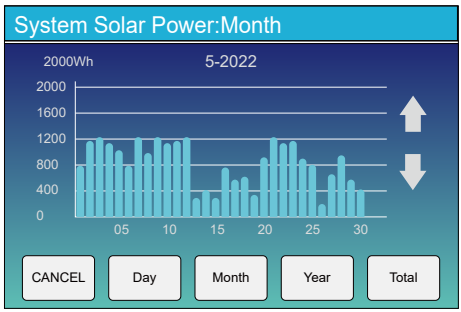

deye.shop · support@deye.shop · 8 800 201-76-60

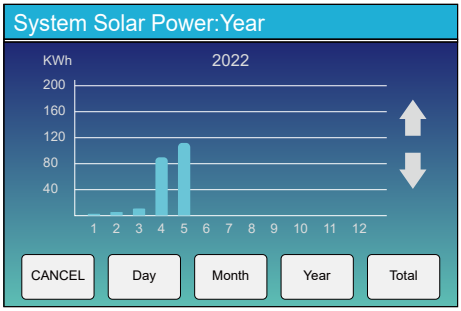

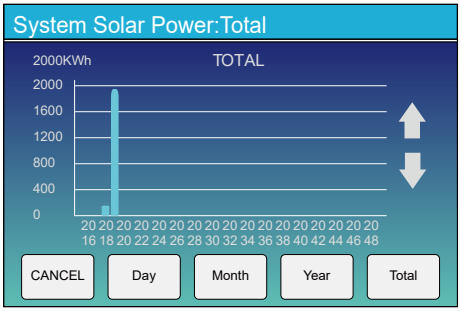

Solar power curve for daily, monthly, yearly and total can be roughly checked on the LCD, for more accuracy power generation, please check on the monitoring system. Click the up and down buttons below the LCD screen to view the power curves of different time periods. The operation of checking the grid power and load power is similar to the above operation.

5.4 System Setup Menu

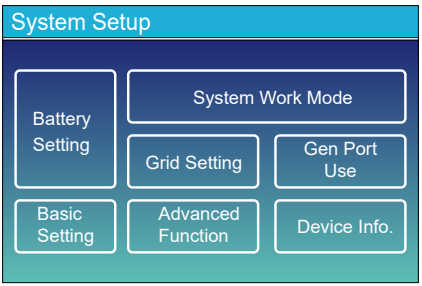

This is System Setup page.

deye.shop · support@deye.shop · 8 800 201-76-60

5.5 Basic Setting Menu

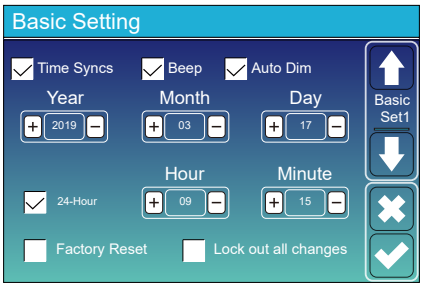

Time Syncs: Enable the inverter to automatically synchronize cloud platform time.
Beep: Used to turn on or off the beep sound in inverter's alarm status.
Auto Dim: Used to automatically adjust the brightness of the LCD display screen.
Factory Reset: Reset all parameters of the inverter.
Lock out all changes: Lock programmable parameters to prevent them from being changed.

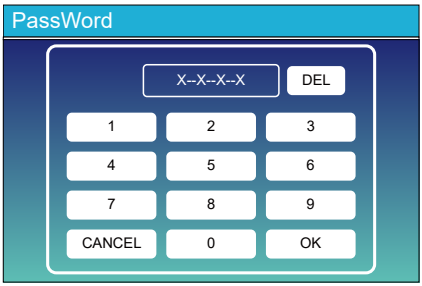

When we select the "factory reset" or"Lock out all changes", the system will require us to enter a password first to confirm the operation.

Factory Reset Password: 9999

Lock out all changes Password: 7777

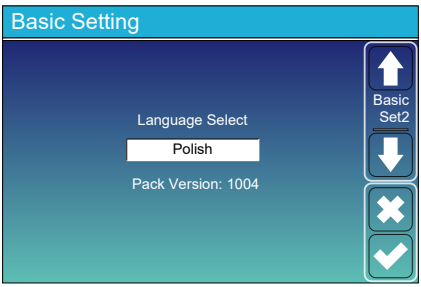

1. Click the down arrow on the left side of the "Basic Set1" page to enter the "Basic Set2" page;
2. On the "Basic Set2" page, you can set the display language of the LCD screen as needed. Click the "UP" and "DOWN" buttons below the LCD screen to switch language options. The current available options are: English, German, Polish, Hungarian, Spanish, Czech, Ukrainian.
3. After switching to the desired language, click on the check mark icon in the bottom right corner of the page to save the settings.

Note：If the current LCD screen does not have a Basic Set2 page, or if the language option on the Basic Set2 page does not include the language you need to set, please contact the after-sales support team to update the HMI firmware and language firmware package of the inverter. After the update is completed, follow the above steps to complete the setup.

deye.shop · support@deye.shop · 8 800 201-76-60

5.6 Battery Setting Menu

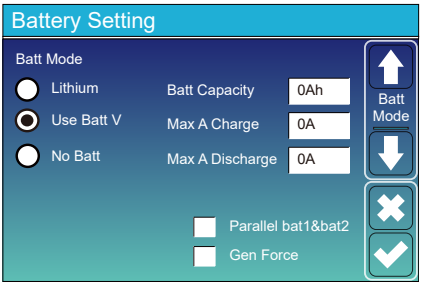

Batt Capacity: Reserved.
Use Batt V: Use battery voltage for all battery related settings.
Max. A charge/discharge: Max battery charge/discharge current(0-80A for 60/70/75/80kW model).
For AGM and Flooded, we recommend Ah battery size x 20%= Charge/Discharge amps.
. For Lithium, we recommend Ah battery size x 50% = Charge/Discharge amps.
. For Gel, follow manufacturer' s instructions.
No Batt: tick this item if no battery is connected to the system.
Parallel bat1&bat2: If one set of batteries are connected to both BAT1 and BAT2 simultaneously, this function needs to be enabled.
When only use BMS1 port of the inverter to communication with the BMS of the battery, and both sets of battery power ports are used, it's necessary to enable "Parallel bat1&bat2" function.If the BMS controller of the battery does not have two sets of power cable wiring terminals, additional DC BUS or combiner box needs to be used. **Please refer to Appendix III, there are several possible scenarios for your reference.**
Gen Force: When the generator is connected, it is forced to start the generator without meeting other conditions.

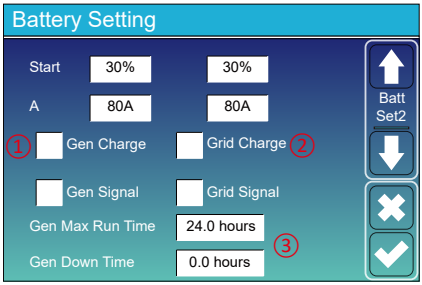

This is Battery Setup page. ① ③

Start =30%: Percent SOC below 30% system will AutoStart a connected generator to charge the battery bank.

A = 80A: The maximum charging current that the generator can support.

Gen Charge: Use the power of diesel generator to charge the battery.

Gen Signal: The normally open relay will close when the battery SOC or voltage drop to the set value of "Start".

Gen Max Run Time: It indicates the longest time Generator can run in one day, when time is up, the Generator will be turned off. 24H means that it does not shut down all the time.

Gen Down Time: It indicates the rest time of the Generator before the inverter start it again.

This is Grid Charge, you need select. ②

Start =30%: When battery SOC or voltage drop to this set value, inverter will start the generator connected to the grid port automatically to charge the battery.

A = 80A: maximum charging current when only use the power fed from the grid port of inverter as the power source, which means using the power of grid or the power of generator connected to the grid port.

Grid Charge: It's allowed to use power fed from the grid port, which includes grid or generator connected to the grid port, to charge the battery.

Grid Signal: When a generator is connected to the grid port of hybrid inverter, this 'Grid signal' can be used to control the dry contact to start or stop the generator.

deye.shop · support@deye.shop · 8 800 201-76-60

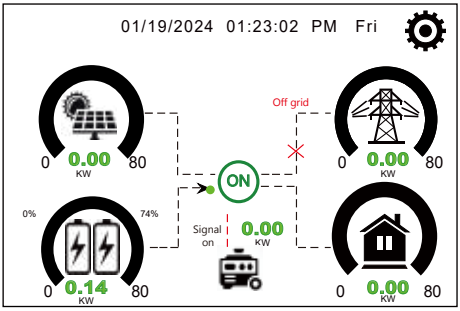

When the "GEN signal" is active, the generator icon will appear on the main screen of inverter LCD display.

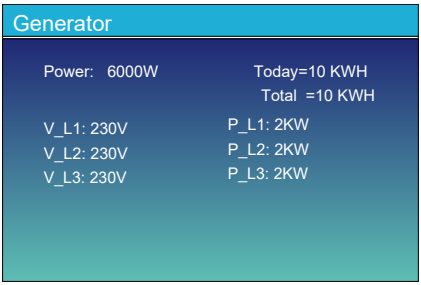

Click the generator icon on the main screen, you can enter the 'Generator' detail page. The information contained on this page is as follows:
(1) How much power is using from generator;
(2) How much energy has used from generator in today or in total;
(3) The output voltage and power on each phase of generator.

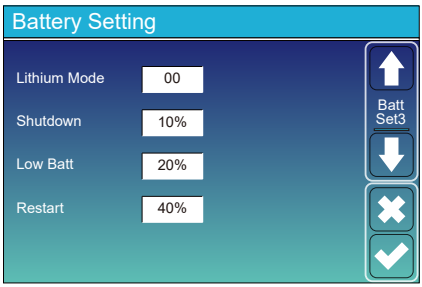

When the "Lithium" mode is selected, the content on the "Batt Set 3" page is shown in the figure on the left.
Lithium Mode: This is the BMS communication protocol code which can be confirmed on the "Deye Approved Battery list" based on the battery model you are using.
Shutdown: Be valid in Off-grid mode, battery can discharge to this SOC, then the DC/AC inverter module of this inverter will be shut down and the solar power can only be used to charge the battery.
Low Batt : Be valid in On-grid mode, when the 'Grid charge' has been checked and the set target battery SOC on 'Time of Use' page isn't less than the "Low Batt" value, the battery SOC will remain above the value of "Low Batt" .
Restart : Be valid in Off-grid mode, after the DC/AC inverter module of this inverter is shut down, the PV power can only be used to charge the battery. After the battery SOC has resumed to this "Restart" value, the DC/AC inverter module will restart to output AC power.

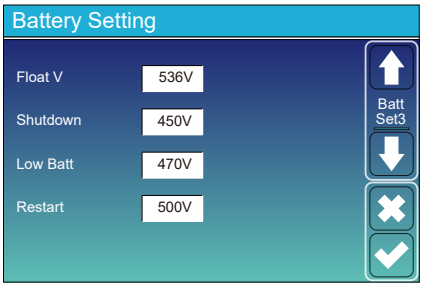

When the "Use Batt V" mode is selected, the content on the "Batt Set 3" page is shown in the figure on the left.
Float voltage: Battery full charge voltage.
Shutdown : Be valid in Off-grid mode, battery can discharge to this voltage, then the DC/AC inverter module of this inverter will be shut down and the solar power can only be used to charge the battery.
Low Batt : Be valid in On-grid mode, when the 'Grid charge' has been checked and the set target battery voltage on 'Time of Use' page isn't less than the "Low Batt" value, the battery voltage will remain above the value of "Low Batt" .
Restart : Be valid in Off-grid mode, after the DC/AC inverter module of this inverter is shut down, the PV power can only be used to charge the battery. After the battery voltage has resumed to this "Restart" value, the DC/AC inverter module will restart to output AC power.

Recommended battery settings

Battery Type	Absorption Stage	Float Stage	Equalization Voltage (every 30 days 3hr)
Lithium	Follow its BMS voltage parameters		

deye.shop · support@deye.shop · 8 800 201-76-60

5.7 System Work Mode Setup Menu

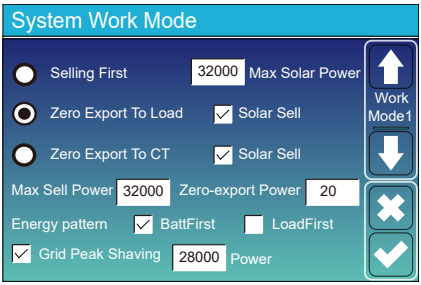

Work Mode
Selling First: This Mode allows hybrid inverter to sell back any excess power produced by the solar panels to the grid. If time of use is active, the battery energy also can be sold into grid.
The PV energy will be used to power the load and charge the battery, then the excess will flow to grid.
Power source priority for the load is as follows:
1. Solar Panels.
2. Batteries（when the actual battery SOC is higher than the target SOC).
3. Grid.
Max Solar Power: the maximum DC input power allowed.

Zero Export To Load: Hybrid inverter will only provide power to the backup load connected. The hybrid inverter will neither provide power to the home load nor sell power to grid,if the "solar sell" behind is not enabled. The built-in CT will detect power flowing back to the grid and will reduce the power of the inverter only to supply the backup load and charge the battery. **Load consumption=Backup load.**

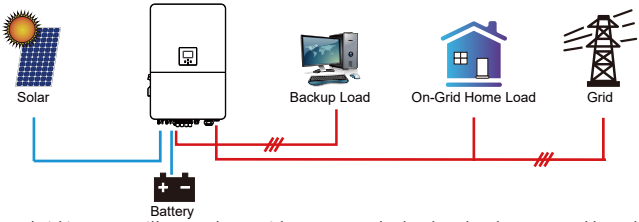

Zero Export To CT: Hybrid inverter will not only provide power to the backup load connected but also give power to the home load connected. If PV power and battery power is insufficient, it will take grid energy as supplement. The hybrid inverter will not sell power to grid,if the "solar sell" behind is not enabled. In this mode, external CTs or smart meter must be installed. For the installation method of CTS or smart meter, please refer to the section 3.7 . The external CTs or smart meter will detect power flowing back to the grid and will reduce the power of the inverter only to supply the backup load, home load and charge the battery. **Load consumption=Backup load+home load.**

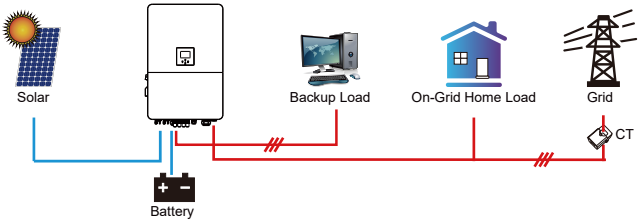

Solar Sell: "Solar sell" is selectable for Zero export to load or Zero export to CT. When activating it, the surplus of the energy generated by the PV can be sold back to grid. When it is active, the energy generated by the PV array will first power the loads or charge the battery, and then export to grid.
Max. sell power: Maximum power allowed to flow to grid.
Zero-export Power: This parameter will ensure the zero-export by taking from the grid some small amount of energy that has been set with this value. It is recommended to set it as 20-100W to ensure the hybrid inverter won' t feed power to grid.
Energy Pattern: Priority of PV power usage. When "Grid charge" is enabled, the default energy pattern is "Load First", this setting will be invalid.
Batt First: PV power is firstly used to charge the battery, and the excess power will be used to power the load. If PV power is insufficient, grid will make supplement for battery and load simultaneously.

Load First: PV power is firstly used to power the load, and the excess power will be used to charge the battery. If PV power is insufficient, Grid will provide power to load.

Grid Peak-shaving: when it is active, grid power will be limited within the set value. If the grid peak-shaving power plus PV power plus battery power cannot meet the power consumption of the load after peak-shaving, the grid peak-shaving will be invalid, and the power taken from the grid can exceed this set value.

deye.shop · support@deye.shop · 8 800 201-76-60

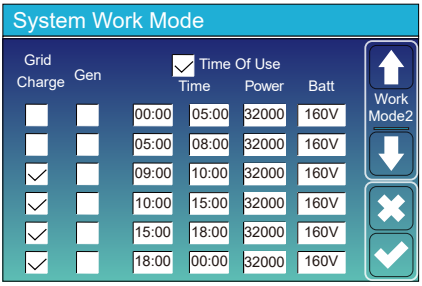

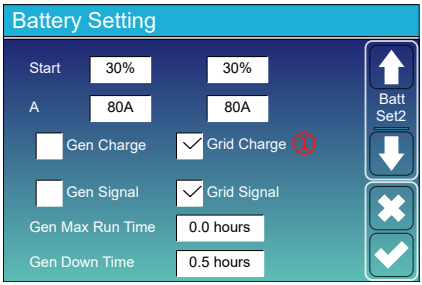

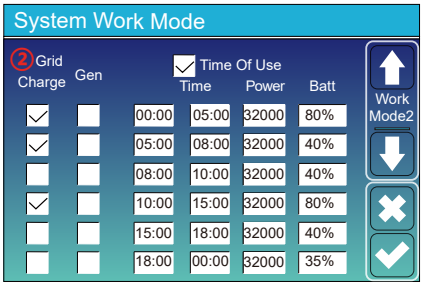

Time of use: it is used to program when to use grid or generator to charge the battery, and when to discharge the battery to power the load. Only tick "Time Of Use" then the follow items (Grid, charge, time, power etc.) will take effect.

Note: when in selling first mode and click time of use, the battery power can be sold into grid.

Grid Charge: uses the grid to charge the battery in the selected period of time.

Gen charge: utilize diesel generator to charge the battery in the selected period of time.

Time: real time, from 0:00 to 0:00 the next day.

Note: For more flexible and controllable use of batteries, it is recommended to enable the "Time Of Use" function.When the inverter is operating in on-grid mode and "Time Of Use" is not enabled, the inverter can charge normally, but only discharge to provide the inverter's self-consumption power, without discharging to power the loads.

Power: Max. discharge power of battery allowed.

Batt(V or SOC %): The target value of battery voltage or SOC during the current time period. If the actual SOC or voltage of the battery is lower than the target value, the battery needs to be charged. If there is a energy source like solar power or grid, the battery will be charged; If the actual SOC or voltage of the battery is higher than the target value, the battery can discharge, and when the solar power is not enough to power the load or the "Selling First "is enabled, the battery will discharge.

Assuming that at the end of the previous time period, the actual battery level reaches or approaches the target value of the previous time period.

For example

During 00:00-05:00,
if battery SOC is lower than 80%, it will use grid to charge the battery until battery SOC reaches 80%.

During 05:00-08:00,
if battery SOC is higher than 40%, hybrid inverter will discharge the battery until the SOC reaches 40%. At the same time, if battery SOC is lower than 40%, then grid will charge the battery SOC to 40%.

During 08:00-10:00,
if battery SOC is higher than 40%, hybrid inverter will discharge the battery until the SOC reaches 40%.

During 10:00-15:00,
If battery SOC is lower than 80%, hybrid inverter will charge the battery until the SOC reaches 80%. If the PV power is sufficient, the battery can be charged to 100%.

During 15:00-18:00,
when battery SOC is higher than 40%, hybrid inverter will discharge the battery until the SOC reaches 40%.

During 18:00-00:00,
when battery SOC is higher than 35%, hybrid inverter will discharge the battery until the SOC reaches 35%.

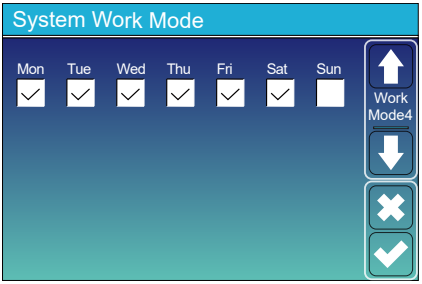

It allows users to choose which day to execute the setting of "Time of Use".
For example, the inverter will execute the time of use page on Mon/Tue/Wed/Thu/Fri/Sat only.

deye.shop · support@deye.shop · 8 800 201-76-60

5.8 Grid Setting Menu

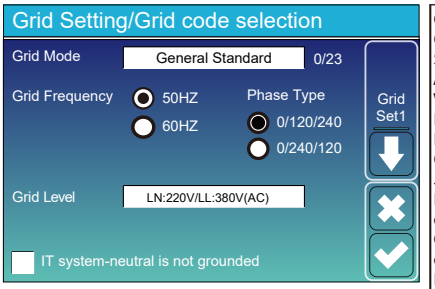

Grid Mode:
General Standard、UL1741 & IEEE1547、CPUC RULE21、SRD-UL-1741、CEI_0_21_Internal、EN50549_CZ-PPDS(>16A)、Australia_A、Australia_B、Australia_C、AS4777_NewZealand、VDE4105、OVE-Directive R25、EN50549_CZ_PPDS_L16A、NRS097、G98、G99、EN50549_1_Norway_133V、EN50549_1_Norway_230V、Japan_200VAC_3P3W、CEI_0_21_External、CEI_0_21_Areti、Japan_400VAC_3P3W、Japan_415VAC_3P4W、EN50549_1_Switzerland.
Please follow the local grid code and then choose the corresponding grid standard.
Grid level: there' re several voltage levels for the inverter output voltage when it is in off-grid mode.
LN:220V/LL:380V(AC), LN:230V/LL:400V(AC).

IT system: If the grid system is IT system, then please enable this option. All the live lines of IT system are insulated from ground, and the neutral point of the IT system is grounded through high impedance or not grounded (as shown in the following figure).

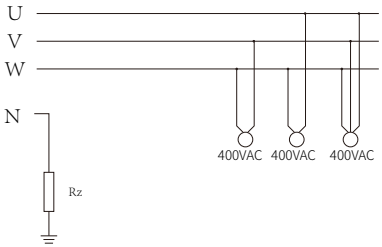

Rz: Large resistance ground resistor. Or the system doesn' t have Neutral line

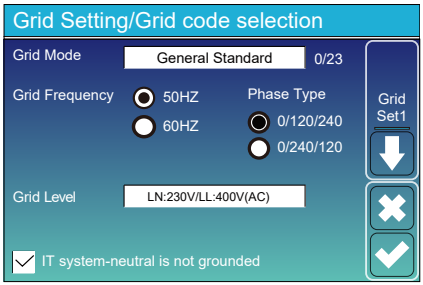

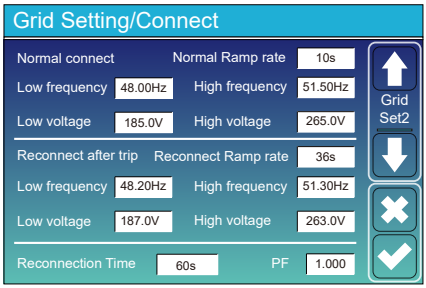

Normal connect: The allowed grid voltage/frequency range when the inverter operates normally.
Normal Ramp rate: It is the startup power ramp.

Reconnect after trip: The allowed grid voltage /frequency range for the inverter connects the grid after the inverter trip from the grid.
Reconnect Ramp rate:It is the reconnection power ramp.

Reconnection time: The waiting time for the inverter connects the grid again after tripping.
PF: Power factor, which is the ratio of active power to apparent power in AC circuits and can be used to adjust the output active power and reactive power of inverter.

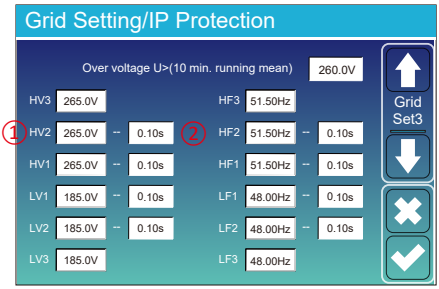

HV1: Level 1 overvoltage protection point;
① **HV2:** Level 2 overvoltage protection point; ② 0.10s—Trip time.
HV3: Level 3 overvoltage protection point.

LV1: Level 1 undervoltage protection point;
LV2: Level 2 undervoltage protection point;
LV3: Level 3 undervoltage protection point.

HF1: Level 1 over frequency protection point;
HF2: Level 2 over frequency protection point;
HF3: Level 3 over frequency protection point.

LF1: Level 1 under frequency protection point;
LF2: Level 2 under frequency protection point;
LF3: Level 3 under frequency protection point.

deye.shop · support@deye.shop · 8 800 201-76-60

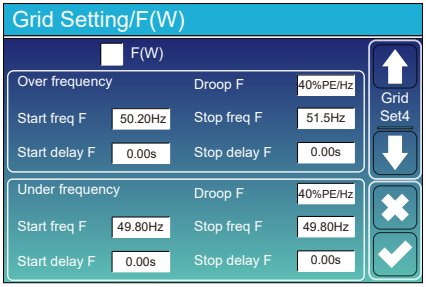

F(W): It's used to adjust the output active power of inverter according to the grid frequency.
Droop F: percentage of nominal power per Hz
For example, "Start freq F=50.2Hz, Stop freq F=51.5, Droop F=40%PE/Hz" when the grid frequency reaches 51.2Hz, the inverter will decrease its active power at Droop F of 40%. And then when grid system frequency is less than 50.1Hz, the inverter will stop decreasing output power.
For the detailed setup values, please follow the local grid code.

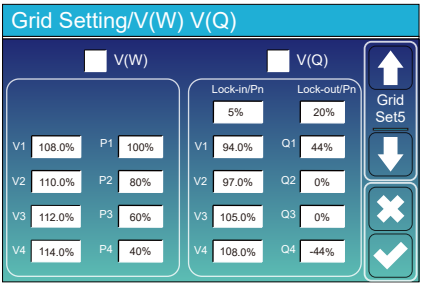

V(W): It is used to adjust the inverter's active power according to the set grid voltage.
V(Q): It is used to adjust the inverter's reactive power according to the set grid voltage.
These two functions are used to adjust inverter's output power (active power and reactive power) when grid voltage changes.

Lock-in/Pn 5%: When the inverter active power is less than 5% rated power, the V(Q) mode will not take effect.
Lock-out/Pn 20%: If the inverter active power is increasing from 5% to 20% rated power, the V(Q) mode will take effect again.

For example: V2=110%, P2=80%. When the grid voltage reaches 110% of the rated grid voltage, inverter will reduce its active power output to 80% of the rated power.
For example: V1=94%, Q1=44%. When the grid voltage reaches 94% of the rated grid voltage, inverter will output reactive power that accounts for 44% of the rated power.
For the detailed setup values, please follow the local grid code.

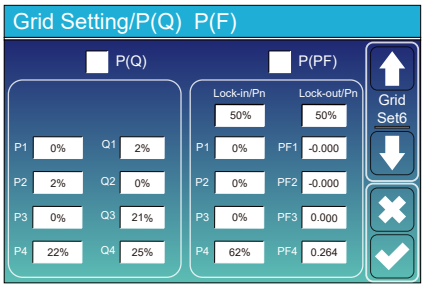

P(Q): It is used to adjust the output reactive power of inverter according to the set active power.
P(PF): It is used to adjust the PF of inverter according to the set active power.
For the detailed setup values, please follow the local grid code.
Lock-in/Pn 50%: When the output active power of inverter is less than 50% of inverter's rated power, it won't enter the P(PF) mode.
Lock-out/Pn 50%:When the output active power of inverter is higher than 50% of inverter's rated power,it will enter the P(PF) mode.
Note : only when the grid voltage is equal to or higher than 1.05 times of the rated grid voltage, then the P(PF) mode will take effect.

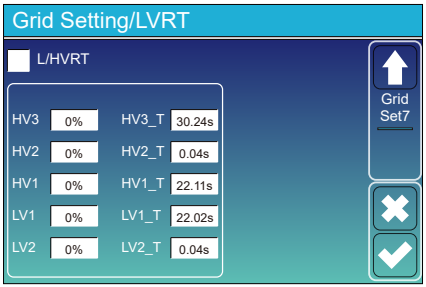

LVRT/HVRT: When the voltage of the power grid reaches the set HV or LV, the relay at the inverter grid port will remain closed for the set time to maintain stable grid connection without tripping.

deye.shop · support@deye.shop · 8 800 201-76-60

5.9 Generator Port Use Setup Menu

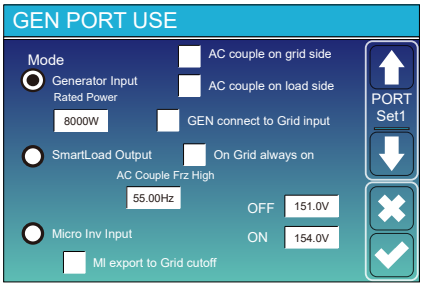

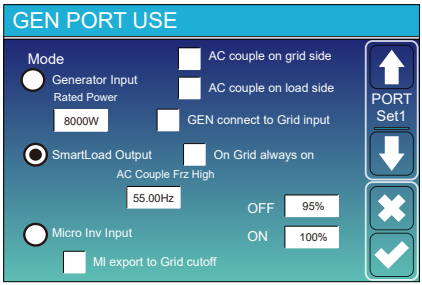

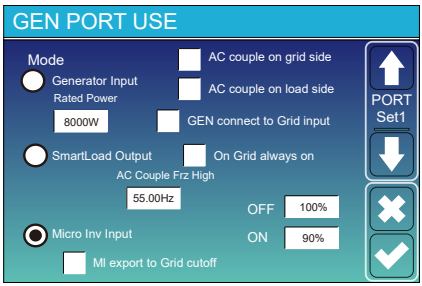

GEN port is a multifunctional port, but you can only choose one of the following three functions at a time.
Generator input rated power: allowed Max. power from diesel generator.
GEN connect to grid input: connect the diesel generator to the grid input port.
Smart Load Output: Use the GEN port as an AC output port, and the load connected to this port can be controlled on/off by the hybrid inverter.
e.g. ON: 100%, OFF: 95%: When the battery bank SOC reaches 100%, Smart Load Port will switch on automatically and power the load connected. When the battery bank SOC < 95% , the Smart Load Port will switch off automatically.

Smart Load OFF Batt
• Battery SOC or voltage at which the Smart load will switch off.
Smart Load ON Batt
• Battery SOC or voltage at which the Smart load will switch on.
On Grid always on: When "on Grid always on" is checked, the smart load port will always keep switching on if hybrid inverter is operating in on-grid mode.
Micro Inv Input: Use the GEN port as an AC couple input port, which can be connected with micro-inverter or other Grid-Tied inverter.
∗**Micro Inv Input ON:** When the hybrid inverter operates in off-grid mode and the SOC or voltage of battery drops to this set value, the relays on GEN port of hybrid inverter will turn to normally closed(ON), then the Grid-Tied inverter will generate solar power and feed into hybrid inverter. When the hybrid inverter operates in on-grid mode, this parameter will be invalid, the relays on GEN port of hybrid inverter will always be normally colsed(ON), Grid-Tied inverter can operate normally.
AC Couple Frz High: If choosing"Micro Inv input", as the battery SOC reaches gradually setting value (OFF), during the process, the microinverter output power will decrease linear. When the battery SOC equals to the setting value (OFF), the system frequency will become the setting value (AC couple Frz high) and the Microinverter will stop working.
Ml export to Grid cutoff: Stop exporting power produced by the microinverter or Grid-Tied inverter to the grid.
AC couple on Load side: Connect one or several on-grid inverters on the Load port side of this hybrid inverter.
AC couple on Grid side: Connect one or several on-grid inverters on the Grid port side of this hybrid inverter.
∗**Note:** Micro Inv Input OFF and On is valid for some certain FW version only.

deye.shop · support@deye.shop · 8 800 201-76-60

5.10 Advanced Function Setup Menu

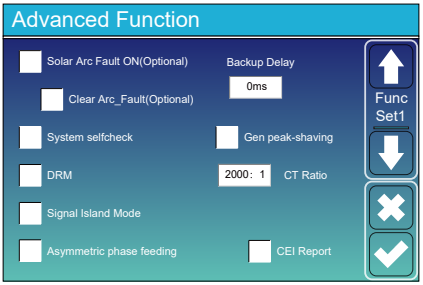

Solar Arc Fault ON(Optional): This feature is optional. After enabling this function, the inverter will detect whether there is a arcing fault on the PV side. If arcing occurs, the inverter will report a fault and stop outputting power.
Clear Arc_Fault(Optional): After the arc fault on the PV side is eliminated, enabling this function can eliminate the arc fault alarm of the inverter and restore normal operation of the inverter.
System selfcheck: Disable. this is only for factory.
Gen Peak-shaving: Limit the maximum output power of the generator to the set rated power on "GEN PORT USE" page, the rest of power consumption will be provided by inverter to ensure that the generator will not overload.
DRM: Demand response mode, receive external commands for active power scheduling and reactive power scheduling.
Backup Delay: When the grid cuts off, the inverter will output power after the set time.
For example, backup delay: 600s. the inverter will give output power after 600s when the grid cuts off.
Note: for some old FW version, this function is not available.

***Signal island mode:** If "Signal island mode" is checked and When inverter is in off-grid mode, the relay on the Neutral line of load port will switch on, then the N line of load port will bind to ground.

***If this item was selected, please ensure that the shell of the inverter is grounded, otherwise there will be electric shock if you touch the shell.**

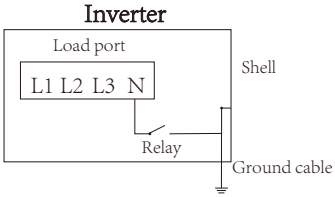

Asymmetric phase feeding: When the loads connected to the Load port have an unbalanced distribution on the three phases and the inverter is working in on-grid mode, enabling this function will ensure an equal power absorption from the three phases of grid.

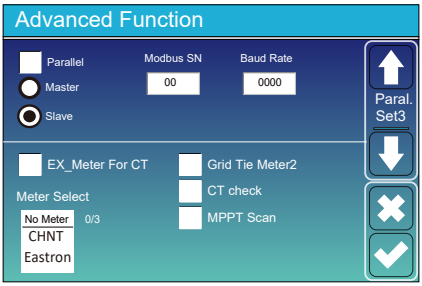

Parallel: Enable this function when several same model hybrid inverters are connecting in parallel.
Master: Select any hybrid inverter in the parallel system as the master inverter, and the master inverter needs to manage the working mode of the parallel system.
Slave: Set the other inverters managed by the master inverter as slave inverter.
Modbus SN: The Modbus address of each inverter, should be different.
Baud Rate: The rate at which inverter transmits data.
Ex_Meter For CT: when using zero-export to CT mode, the hybrid inverter can select EX_Meter For CT functionand use the different meters.e.g.CHNT and Eastron.
Grid Tie Meter2: When there are one or more grid-tied inverters AC coupled on the grid or load port side of the hybrid inverter, and external meter is installed for this/these grid-tied inverters, it is necessary to enable this function to upload the data of the external meter to the hybrid inverter to ensure that the power consumption data of the load is correct.
CT Check: Inverter will perform self check on external CT and return the test results.
MPPT Scan: After enabling this function, MPPT will perform I-V curve scanning every 5 minutes to find the maximum power point again and eliminate MPPT failure caused by shadows.

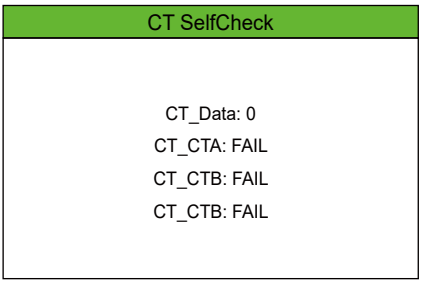

CT_Data: The CT self-check result data presented in decimal format needs to be parsed into binary to display whether the three CTs are correctly connected.

CT_CTA: Analysis of A-phase CT self-check result.
CT_CTB: Analysis of B-phase CT self-check result.
CT_CTC: Analysis of C-phase CT self-check result.

deye.shop · support@deye.shop · 8 800 201-76-60

5.11 Device Info Menu

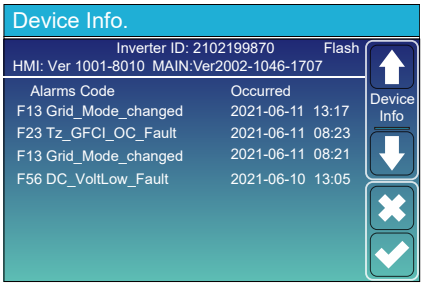

This page show Inverter ID, Firmware version and alarm codes.

HMI: LCD version

MAIN: Control board FW version

6. Mode

Mode I:Basic

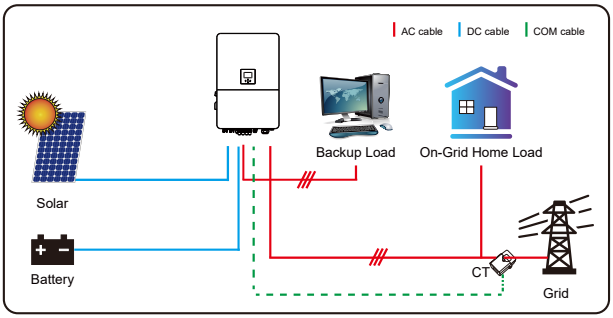

Mode II: With Generator

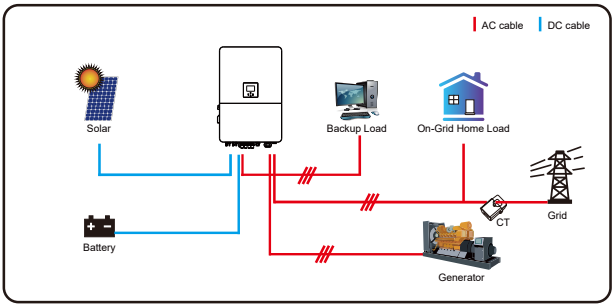

Note: When using the GEN port as the "generator input" port, the relays on the grid port and GEN port of the inverter will not be closed simultaneously. The relays on the GEN port will only be closed when the inverter is running in off-grid mode.

deye.shop · support@deye.shop · 8 800 201-76-60

Mode III: With Smart-Load

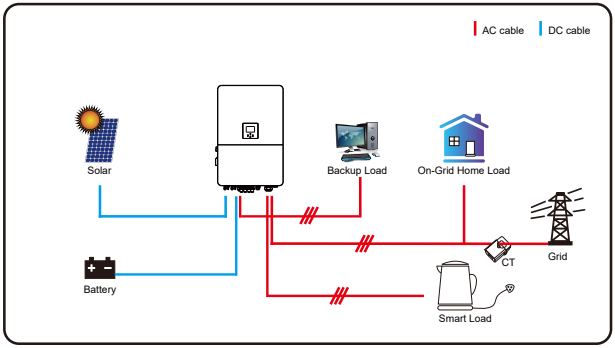

Mode IV: AC Couple

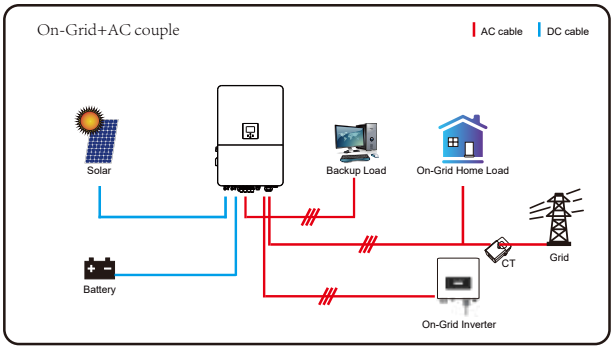

The 1st priority power of the system is always the PV power, then 2nd and 3rd priority power will be the battery bank or grid according to the settings. The last power backup will be the Generator if it is available.

7. Warranty

As to Warranty terms, please refer to 《General Warranty Agreement - DEYE》.

Under the guidance of our company, customers return our products so that our company can provide service of maintenance or replacement of products of the same value. Customers need to pay the necessary freight and other related costs. Any replacement or repair of the product will cover the remaining warranty period of the product. If any part of the product or product is replaced by the company itself during the warranty period, all rights and interests of the replacement product or component belong to the company.
Factory warranty does not include damage due to the following reasons:

deye.shop · support@deye.shop · 8 800 201-76-60

· Damage during transportation of equipment;
· Damage caused by incorrect installation or commissioning;
· Damage caused by failure to comply with operation instructions, installation instructions or maintenance instructions;
· Damage caused by attempts to modify, alter or repair products;
· Damage caused by incorrect use or operation;
· Damage caused by insufficient ventilation of equipment;
· Damage caused by failure to comply with applicable safety standards or regulations;
· Damage caused by natural disasters or force majeure (e.g. floods, lightning, overvoltage, storms, fires, etc.)

In addition, normal wear or any other failure will not affect the basic operation of the product. Any external scratches, stains or natural mechanical wear does not represent a defect in the product.

8. Troubleshooting

Perform troubleshooting according to the solutions in the table below. Contact the after-sales service if these methods do not work.
Collect the information below before contacting the after-sales service, so that the problems can be solved quickly.
• Inverter information like serial number, firmware version, installation date, fault time, fault frequency, etc.
• Installation environment, including weather conditions, whether the PV modules are sheltered or shadowed, etc. It is recommended to provide some photos and videos to assist in analyzing the problem.
• Utility grid situation.

deye.shop · support@deye.shop · 8 800 201-76-60

Error code	Description	Solutions
W01	Reserved	
W02	FAN_IN_Warn	1. Check the operating status of the fan. 2. If the fan is running abnormally, open the cover of the inverter to check the connection of the fan.
W03	Grid_phase_warn	1. Check the phase sequence connection of the power grid. 2. Try to change the grid type, 0, 240/120. 3. If there is still no solution to check the wiring at the grid end.
W04	Meter_offline_warn	Meter communication failure Check whether the meter has successful communication and whether the wiring is normal.
W05	CT_WRONG_direction_warn	Check whether the arrow on CT's case point to the inverter or not , and check if the installation location of CTs are correct.
W06	CT_Notconnect_warn	Check whether the wires of CTs are connected correctly or not.
W07	FAN_OUT1_Warn	Check whether the FAN are connected correctly and operating normally.
W08	FAN_OUT2_Warn	Check whether the FAN are connected correctly and operating normally.
W09	FAN_OUT3_Warn	Check whether the FAN are connected correctly and operating normally.
W10	VW_activate	1. Measure whether the grid port voltage is too high. 2. Check whether the AC cable is too thin to carry current.
W31	Battery_comm_warn	Abnormal battery communication 1. Check whether the BMS connection is stable. 2. Check whether the BMS data is abnormal.
W32	Parallel_comm_warn	Unstable parallel communication 1. Check the connection of the parallel communication line. Please do not wind the parallel communication line with other cables. 2. Check whether the parallel dip switch is on.
F01	DC_Inversed_Failure	Check the PV input polarity.
F02	DC_Insulation_Failure	Check whether the PV is grounded, secondly, check whether the impedance of the PV to the ground is normal.
F03	GFDI_Failure	1.Check whether the PV modules are grounded. 2. Check whether the impedance of the PV to the ground is normal, whether there is leakage current.

deye.shop · support@deye.shop · 8 800 201-76-60

Error code	Description	Solutions
F04	GFDI_Ground_Failure	Check whether the PV is grounded.
F05	EEPROM_Read_Failure	Restart the inverter 3 times and restore the factory settings.
F06	EEPROM_Write_Failure	Restart the inverter 3 times and restore the factory settings
F07	DCDC1_START_Failure	The BUS voltage can’t be reached by PV or battery. 1. Switch off the DC switches and restart the inverter.
F08	DCDC2_START_Failure	The BUS voltage can’t be reached by PV or battery. 1. Switch off the DC switches and restart the inverter.
F09	IGBT_Failure	Restart the inverter 3 times and restore the factory settings.
F10	AuxPowerBoard_Failure	1. First check whether the inverter switch is open. 2. Restart the inverter 3 times and restore the factory settings.
F11	AC_MainContactor_Failure	Restart the inverter 3 times and restore the factory settings.
F12	AC_SlaveContactor_Failure	Restart the inverter 3 times and restore the factory settings.
F13	Working_Mode_Change	1. When the grid type and frequency have changed it will report F13. 2. When the battery mode has been changed to "No battery" mode, it will report F13. 3. For some old FW version, it will report F13 when the system's work mode has been changed. 4. Generally, this error will disappear automatically. 5. If it remains the same, turn off DC and AC switches for one EEPROM_Write_Failure minute, then turn on the DC and AC switches.
F14	DC_OverCurr_Failure	Restart the inverter 3 times and restore the factory settings.
F15	AC_OverCurr_SW_Failure	AC side over current fault 1. Please check whether the backup load power and common load power are within the range. 2. Restart and check whether it is normal.
F16	GFCI_Failure	Leakage current fault 1. Check the PV side cable ground connection. 2. Restart the system 2-3 times.
F17	Tz_PV_OverCurr_Fault	1. Check the PV connection and whether the PV is unstable. 2. Restart the inverter 3 times.
F18	Tz_AC_OverCurr_Fault	AC side over current fault 1. Please check whether the backup load power and commonload power are within the range. 2. Restart and check whether it is normal.
F19	Tz_Integ_Fault	Restart the inverter 3 times and restore the factory settings.

deye.shop · support@deye.shop · 8 800 201-76-60

Error code	Description	Solutions
F20	Tz_Dc_OverCurr_Fault	DC side over current fault 1. Check PV module connection and battery connection; 2. When in the off-grid mode, starting the inverter under a high power load may report F20. Please reduce the load power connected. 3. If it remains the same, turn off DC and AC switches for one minute, then turn on the DC and AC switches.
F21	Tz_HV_Overcurr_Fault	BUS over current 1. Check the PV input current and battery current setting. 2. Restart the system 2~3 times.
F22	Tz_EmergStop_Fault	Remotely shutdown It means the inverter is remotely controlled.
F23	Tz_GFCI_OC_Fault	Leakage current fault 1. Check PV side cable ground connection. 2. Restart the system 2~3 times.
F24	DC_Insulation_Fault	PV isolation resistance is too low 1. Check the connection of PV panels and inverter is firm and correct. 2. Check whether the PE cable of inverter is connected to ground.
F25	DC_Feedback_Fault	Restart the inverter 3 times and restore the factory settings.
F26	BusUnbalance_Fault	1. Please wait for a while and check whether it is normal. 2. When the load power of 3 phases has a big different, it will report the F26. 3 .When there's DC leakage current, it will report F26. 4. Restart the system 2~3 times.
F27	DC_Insulation_Fault	Restart the inverter 3 times and restore the factory settings.
F28	DCIOver_M1_Fault	Restart the inverter 3 times and restore the factory settings.
F29	Parallel_Comm_Fault	1. When inverters are connected in parallel, check the parallel communication cable connection and hybrid inverter communication address setting. 2. During the parallel system startup period, inverters will report F29. But when all inverters are in ON status, it will disappear automatically.
F30	AC_MainContactor_Fault	Restart the inverter 3 times and restore the factory settings.
F31	AC_SlaveContactor_Fault	1. Check whether the grid orientation is correct, 2. Restart the inverter 3 times and restore the factory settings
F32	DCIOver_M2_Fault	Restart the inverter 3 times and restore the factory settings.
F33	AC_OverCurr_Fault	1. Check whether the grid current is too large. 2. Restart the inverter 3 times and restore the factory settings.
F34	AC_Overload_Fault	Check the backup load connection, make sure it is within the allowed power range.

deye.shop · support@deye.shop · 8 800 201-76-60

Error code	Description	Solutions
F35	AC_NoUtility_Fault	Check the grid voltage and frequency, whether the connection of the power grid is normal.
F36	Reserved	
F37	Reserved	
F38	Reserved	
F39	INT_AC_OverCurr_Fault	Inverter AC overcurrent, restart the inverter.
F40	INT_DC_OverCurr_Fault	Inverter DC overcurrent, restart the inverter.
F41	Parallel_system_Stop	Check the hybrid inverter work status. If there is at least one hybrid inverter shutdown, all hybrid inverters will report F41 fault.
F42	Parallel_Version_Fault	1. Check whether the inverter version is consistent. 2. Please contact us to upgrade the software version.
F43	Reserved	
F44	Reserved	
F45	AC_UV_OverVolt_Fault	Grid voltage out of range 1. Check the voltage is in the range of specification or not. 2. Check whether AC cables are firmly and correctly connected.
F46	AC_UV_UnderVolt_Fault	Grid voltage out of range 1. Check the voltage is in the range of specification or not. 2. Check whether AC cables are firmly and correctly connected.
F47	AC_OverFreq_Fault	Grid frequency out of range 1. Check whether the frequency is in the range of the specification or not. 2. Check whether AC cables are firmly and correctly connected.
F48	AC_UnderFreq_Fault	Grid frequency out of range 1. Check whether the frequency is in the range of the specification or not. 2. Check whether AC cables are firmly and correctly connected.
F49	AC_U_GridCurr_DcHigh_Fault	Restart the inverter 3 times and restore the factory settings.
F50	AC_V_GridCurr_DcHigh_Fault	Restart the inverter 3 times and restore the factory settings.

deye.shop · support@deye.shop · 8 800 201-76-60

Error code	Description	Solutions
F51	Battery_Temp_High_Fault	Check wether the temperature data of BMS is too high.
F52	DC_VoltHigh_Fault	BUS voltage is too high 1. Check whether battery voltage is too high. 2. check the PV input voltage, make sure it is within the allowed range.
F53	DC_VoltLow_Fault	BUS voltage is too low 1. Check whether battery voltage is too low. 2. If the battery voltage is too low, use PV or grid to charge the battery.
F54	BAT2_VoltHigh_Fault	1. Check the battery 2 terminal voltage is high. 2. Restart the inverter 2 times and restore the factory settings.
F55	BAT1_VoltHigh_Fault	1. Check the battery 1 terminal voltage is high. 2. Restart the inverter 2 times and restore the factory settings.
F56	BAT1_VoltLow_Fault	1. Check the battery 1 terminal voltage is low. 2. Restart the inverter 2 times and restore the factory settings.
F57	BAT2_VoltLow_Fault	1. Check the battery 2 terminal voltage is low; 2. Restart the inverter 2 times and restore the factory settings.
F58	Battery_Comm_Lose	1. It means that the communication between the hybrid inverter and the battery BMS is disconnected when "BMS_Err-Stop" is active. 2. To avoid this error, disable "BMS_Err-Stop" item on the LCD.
F59	Reserved	
F60	GEN_FAULT	Check whether the voltage and frequency of the generator are normal, and then restart.
F61	INVERTER_Manual_OFF	Check whether the switch of the inverter is turned on, restart the inverter, and restore the factory settings.
F62	DRMs_Stop	Check the DRM function is active or not.
F63	ARC_Fault	1. ARC fault detection is only for US market. 2. Check PV module cable connection and clear the fault.
F64	Heatsink_HighTemp_Fault	Heat sink temperature is too high 1. Check whether the working environment temperature is too high. 2. Turn off the inverter for 10 minutes and restart.

Chart 8-1 Fault information

deye.shop · support@deye.shop · 8 800 201-76-60

9. Datasheet

Model	SUN-60K -SG02HP3 -EU-EM6	SUN-70K-SG02HP3 -EU-EM6	SUN-75K-SG02HP3 -EU-EM6	SUN-80K-SG02HP3 -EU-EM6
Battery Input Data				
Battery Type	Lithium-ion			
Battery Voltage Range(V)*	160-1000			
Max. Charging Current(A)	80+80			
Max. Discharging Current(A)	80+80			
Charging Strategy for Li-ion Battery	Self-adaption to BMS			
Number of Battery Input	2			
PV String Input Data				
Max. PV access power(W)	120000	140000	150000	160000
Max. PV Input Power(W)	96000	112000	120000	128000
Max. PV Input Voltage (V)	1000			
Start-up Voltage(V)	180			
PV Input Voltage Range(V)*	180-1000			
MPPT Voltage Range(V)	150-850			
Full Load MPPT Voltage Range(V)	365-850	425-850	455-850	485-850
Rated PV Input Voltage (V)	650			
Max. Operating PV Input Current(A)	36+36+36+36+36+36			
Max. Input Short-Circuit Current(A)	54+54+54+54+54+54			
No. of MPP Trackers/No. of Strings MPP Tracker	6/2+2+2+2+2+2			
Max. Inverter Backfeed Current To the Array	0			
AC Input/Output Data				
Rated AC Input/Output Active Power(W)	60000	70000	75000	80000
Max. AC Input/Output Apparent Power(VA)	66000	77000	82500	88000
Peak Power (off-grid)(W)	1.5 time of rated power, 10 S			
Rated AC Input/Output Current(A)	91/87	106.1/101.5	113.7/108.7	121.3/116
Max. AC Input/Output Current(A)	100/95.7	116.7/111.6	125/119.6	133.4/127.6
Max. Continuous AC Passthrough (grid to load)(A)	200			
Max. Output Fault Current (A)	256			
Max. Output Overcurrent Protection (A)	334			
Rated Input/Output Voltage/Range(V)	220/380V, 230/400V 0.85Un-1.1Un			
Grid Connection Form	3L+N+PE			
Rated Input/Output Grid Frequency/Range	50Hz/45Hz-55Hz 60Hz/55Hz-65Hz			
Power Factor Adjustment Range	0.8 leading to 0.8 lagging			
Total Current Harmonic Distortion THDi	<3% (of nominal power)			
DC Injection Current	<0.5% In			
Efficiency				
Max. Efficiency	98.70%			
Euro Efficiency	98.10%			
MPPT Efficiency	>99%			
Equipment Protection				
DC reverse polarity protection	Yes			
AC Output Overcurrent Protection	Yes			
AC Output Overvoltage Protection	Yes			
AC Output Short Circuit Protection	Yes			
Thermal Protection	Yes			
Insulation Impedance detection	Yes			

deye.shop · support@deye.shop · 8 800 201-76-60

DC Component Monitoring	Yes
Arc fault circuit interrupter (AFCI)	Optional
Anti-islanding protection	Yes
DC Switch	Yes
Residual Current Detection	Yes
Surge Protection Level	TYPE II(DC),TYPE II(AC)
Interface	
Display	LCD+LED
Communication Interface	RS232, RS485, CAN
Monitor Mode	GPRS/WIFI/Bluetooth/4G/LAN (optional)
General Data	
Operating Temperature Range	-40 to +60°C, >45°C Derating
Permissible Ambient Humidity	0-100%
Permissible Altitude	3000m
Noise	≤ 65 dB
Ingress Protection(IP) Rating	IP 65
Inverter Topology	Non-Isolated
Over Voltage Category	OVC II(DC), OVC III(AC)
Cabinet size(W*H*D) [mm]	606W×927H×314D (Excluding connectors and brackets)
Weight(kg)	105
Installation Style	Wall-mounted
Warranty	5 Years/10 Years the Warranty Period Depends the Final Installation Site of Inverter, More Info Please Refer to Warranty Policy
Type of Cooling	Smart cooling
Grid Regulation	IEC 61727,IEC 62116,CEI 0-21,EN 50549,NRS 097,RD 140, UNE 217002,OVE-Richtlinie R25,G99,VDE-AR-N 4105
Safety EMC/Standard	IEC/EN 61000-6-1/2/3/4, IEC/EN 62109-1, IEC/EN 62109-2

* Battery Voltage Range: Please refer to the 'Approved Battery List' for the allowable range of battery module quantity for a set of batteries to ensure the normal operation of the system.
* PV Input Voltage Range:To ensure the system operates at optimal performance, it is recommended to maintain the open-circuit voltage (Voc) of the PV strings below 850V.

10. Appendix I

Definition of RJ45 Ports

No.	Color	BMS1	BMS2	Meter	RS485
1	Orange&White	485_B	485_B	485_B	485_B
2	Orange	485_A	485_A	485_A	485_A
3	Green&White	GND_485	GND_485	GND_COM	GND_485
4	Blue	CAN-H1	CAN-H2	485_B	——
5	Blue&White	CAN-L1	CAN-L2	485_A	——
6	Green	GND_485	GND_485	GND_COM	GND_485
7	Brown&White	485_A	485_A	——	485_A
8	Brown	485_B	485_B	——	485_B

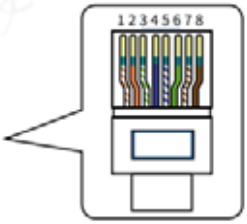

deye.shop · support@deye.shop · 8 800 201-76-60

This model of inverter has two types of logger interfaces, DB9 and USB. Please refer to the actual inverter received for the actual interface type.

RS232

No.	RS232
1	
2	TX
3	RX
4	
5	D-GND
6	
7	
8	
9	12Vdc

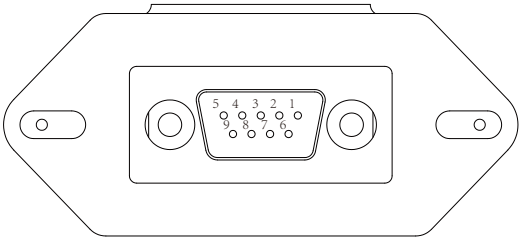

DB9 (RS232)

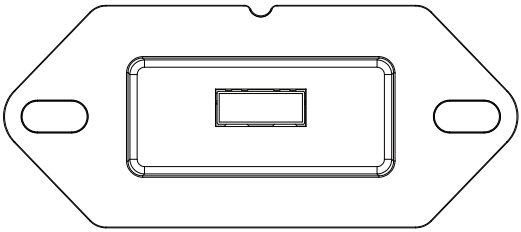

USB

deye.shop · support@deye.shop · 8 800 201-76-60

DRM : It is used to accept the external control command.

Definition of RJ45 Port Pin for DRM

No.	DRM
1	DI 1
2	DI 2
3	DI 3
4	DI 4
5	REF
6	GND
7	Reserved
8	Reserved

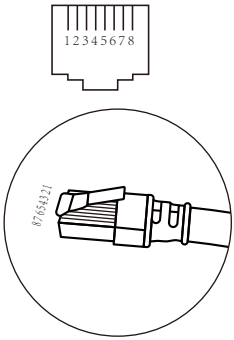

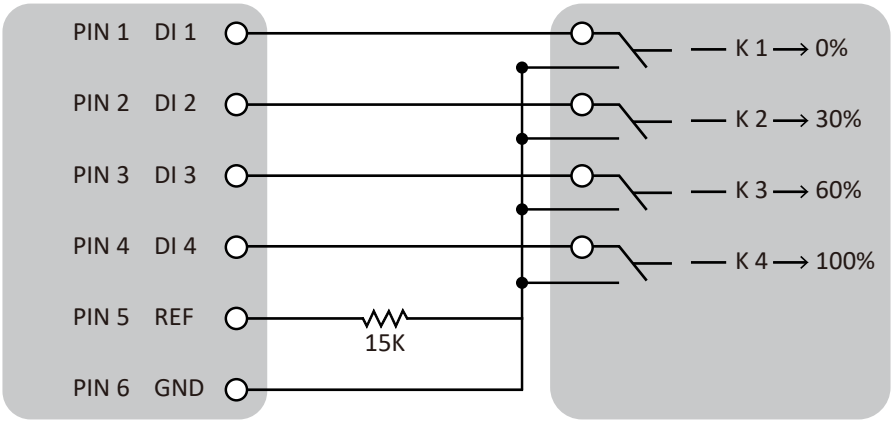

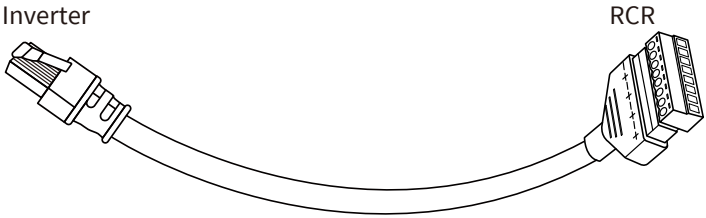

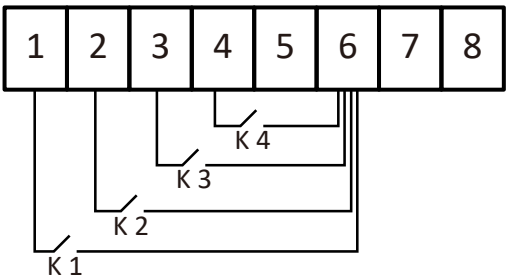

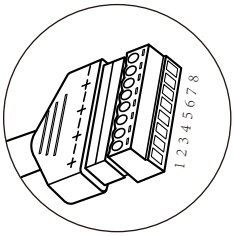

deye.shop · support@deye.shop · 8 800 201-76-60

11. Appendix II

1. Split Core Current Transformer (CT) dimension: (mm)
2. Secondary output cable length is 4m.

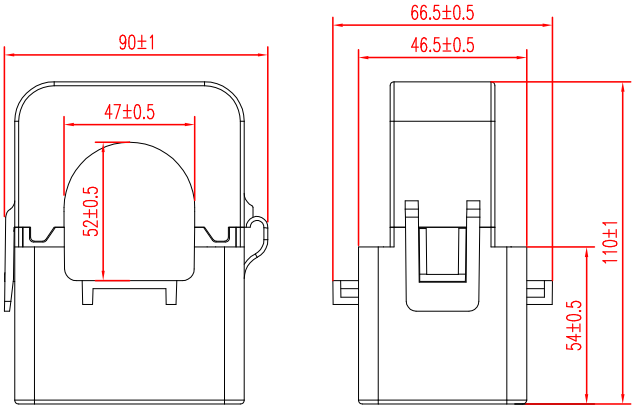

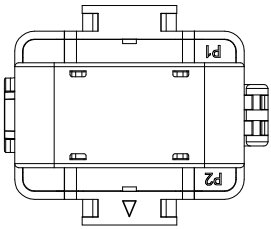

12. Appendix III

When enable "Parallel bat1& bat2", please refer to the below diagram for the battery connection.

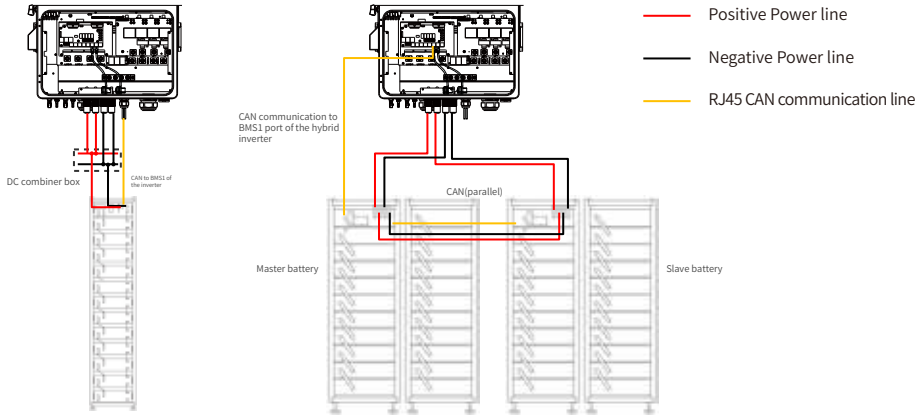

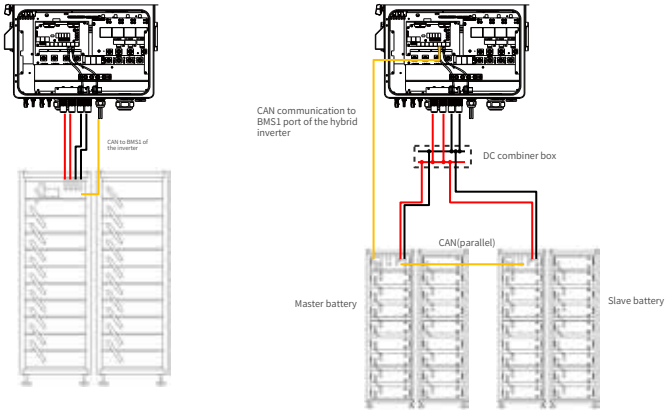

13. EU Declaration of Conformity

within the scope of the EU directives

- Electromagnetic compatibility 2014/30/EU (EMC)
- Low Voltage Directive 2014/35/EU (LVD)
- Restriction of the use of certain hazardous substances 2011/65/EU (RoHS)

NINGBO DEYE INVERTER TECHNOLOGY CO., LTD. confirms herewith that the products described in this document are in compliance with the fundamental requirements and other relevant provisions of the above mentioned directives. The entire EU Declaration of Conformity and certificate can be found at https://www.deyeinverter.com/download/#hybrid-inverter-5.

deye.shop · support@deye.shop · 8 800 201-76-60

Deye

250217001
www.deyeinverter.com

EU Declaration of Conformity

Product **Hybrid Inverter**
Models: SUN-60K-SG02HP3-EU-EM6; SUN-70K-SG02HP3-EU-EM6; SUN-75K-SG02HP3-EU-EM6;
SUN-80K-SG02HP3-EU-EM6;

Name and address of the manufacturer: Ningbo Deye Inverter Technology Co., Ltd.
No. 26 South Yongjiang Road, Daqi, Beilun, NingBo, China

This declaration of conformity is issued under the sole responsibility of the manufacturer. Also this product is under manufacturer's warranty.
This declaration of conformity is not valid any longer: if the product is modified, supplemented or changed in any other way, as well as in case the product is used or installed improperly.

The object of the declaration described above is in conformity with the relevant Union harmonization legislation: The Low Voltage Directive (LVD) 2014/35/EU;the Electromagnetic Compatibility (EMC) Directive 2014/30/EU;the restriction of the use of certain hazardous substances (RoHS) Directive 2011/65/EU.

References to the relevant harmonized standards used or references to the other technical specifications in relation to which conformity is declared:

LVD:	
EN 62109-1:2010	●
EN 62109-2:2011	●
EMC:	
EN IEC 61000-6-1:2019	●
EN IEC 61000-6-2:2019	●
EN IEC 61000-6-3:2021	●
EN IEC 61000-6-4:2019	●
EN IEC 61000-3-2:2019+A1:2021	●
EN 61000-3-3:2013/A2:2021/AC:2022-01	●
EN IEC 61000-3-11:2019	●
EN 61000-3-12:2011	●
EN 55011:2016/A2:2021	●

Nom et Titre / Name and Title: Bard Dai
Senior Standard and Certification Engineer

Au nom de / On behalf of: Ningbo Deye Inverter Technology Co., Ltd.
Date / Date (yyyy-mm-dd): 2025-02-17
A / Place: Ningbo, China

EU DoC – v1

Ningbo Deye Inverter Technology Co., Ltd.
No. 26 South Yongjiang Road, Daqi, Beilun, NingBo, China

V1.3.1, 2026-01-21

NINGBO DEYE INVERTER TECHNOLOGY CO., LTD.

Add.: No.26 South YongJiang Road, Daqi, Beilun, NingBo, China.

Tel.: +86 (0) 574 8622 8957

Fax.: +86 (0) 574 8622 8852

E-mail: service@deye.com.cn

Web.: www.deyeinverter.com

30240301004480

deye.shop - support@deye.shop - 1.800.201.76.60

deye.shop

Поддержка на русском — deye.shop

Официальный дилер Deye в России — ООО «НТ»

Мы отвечаем на русском языке по любому оборудованию Deye из этого документа.

- Подберём инвертор и аккумуляторы под ваш дом или объект.
- Ответим на вопросы по монтажу, настройке и кодам ошибок.
- Поможем с гарантийным обращением.

Телефон	8 (800) 201-76-60, звонок по России бесплатный
Техническая поддержка	support@deye.shop
Заказы и счета	zakaz@deye.shop
Сайт	deye.shop

На сайте — документы на русском, цены с НДС и наличие на складах в Ростове-на-Дону, Подмосковье и Краснодаре. Работаем в будни с 9:00 до 18:00 по Москве.